제2020 - 2113441 호

안 전 인 증 서

(사업장명) 극동호이스트(주)

(소 재 지) (15423)경기도 안산시 단원구 해봉로 119(성곡동)

위 사업장에서 제조하는 아래의 품목이 산업안전보건법 제84조 및 시행규칙 제110조제1항에 따른 안전인증 심사 결과 안전·보건기준에 적합하므로 안전인증표시의 사용을 인증합니다.

품 목

호이스트 (국내품)

형식,모델(용량,등급)/인증번호

KDC20/10-MA (20/10Ton) / 20-AE2AC-00031

인 증 기 준

고용노동부 고시 제2020 - 41호 (위험기계·기구 안전인증 고시)

인 증 조 건

(15423)경기도 안산시 단원구 해봉로 119(성곡동)에서 생산된 동일 형식 제품에 한함

설치장소 : 극동호이스트(주)

2020년 04월 03일

한국산업안전보건공단 이사장

심사결과 통지서

신청인	사업장명	극동호이스트(주)	사업장관리번호	134-81-013350
	사업자등록번호	134-81-01335	대표자 성명	최성찬
	소재지	(154 - 23) 경기도 안산시 단원구 해봉로 119(성곡동)		

안전인증대상 기계·기구명	호이스트 [동일형식 인정 - "별첨" 참조(4모델)]		
형 식 (규 격)	KDC20/10-MA	용 량 (등 급)	20(20/10) Ton

산업안전보건법 제 84조 및 같은 법 시행규칙 제110조에 따라 실시한

] 예비심사

V] 서면심사

] 기술능력 및 생산체계 심사

] 개별 제품심사

] 개별 제품심사(제작중)

] 형식별 제품심사

결과가 [V] 적 합 / [ ] 부적합 함을 통지합니다.

2020년 03월 11일

인증심사원 이승태 정용하 정영애 이 승태 (서명 또는 인)

한국산업안전보건공단 이사장

[별첨] 동일형식일람표

<table>
<tr><td>사업장명</td><td>극동호이스트(주)</td><td>개정일자
및 번호</td><td colspan="2">-</td><td>인증번호</td><td colspan="2"></td></tr>
<tr><td colspan="2">형식 및 모델번호</td><td colspan="4">동일형식 항목 및 내역</td><td rowspan="2">비고</td></tr>
<tr><td>형식번호</td><td>모델번호</td><td>권상속도(m/min)</td><td>횡행속도(m/min)</td><td>양정(m)</td><td>횡행방식</td></tr>
<tr><td rowspan="4">KDC20/10-MA</td><td>KDC20/10-L12-MA</td><td rowspan="4">20톤 고속 : 4.2
10톤 고속 : 4.5

20톤 CREEP : 0.42
10톤 CREEP : 0.45</td><td rowspan="4">고속 : 15
(INVERTER : 2-15)

저속 : 10
(INVERTER : 2-10)</td><td>12</td><td rowspan="4">모터구동식</td><td rowspan="4">INVERTER
포함</td></tr>
<tr><td>KDC20/10-L18-MA</td><td>18</td></tr>
<tr><td>KDC20/10-L24-MA</td><td>24</td></tr>
<tr><td>KDC20/10-L30-MA</td><td>30</td></tr>
</table>

불법복제 및 배포금지

서 면 심 사 서 류

형식 번호 : KDC20/10-MA

극 동 호 이 스 트 ㈜

工場 : 경기도 안산시 단원구 해봉로 119 (성곡동)

電話 : 031) 491 - 5311

FAS : 031) 494 - 5315

192.168.11.51 / 2020-03-16 10:52:57

동 일 형 식 일 람 표

사업장명	극동호이스트㈜	개정일자 및 번호			인증번호	
형식 및 모델		동일 형식 인정범위 및 내역				비 고
형식	모델	권상속도(m/min)	횡행속도(m/min)	양정(m)	횡행방식	
KDC20/10-MA	KDC20/10-L12-MA	고속 20T : 4.2M/MIN 고속 10T : 4.5M/MIN CREEP 20T : 0.42M/MIN CREEP 10T : 0.45M/MIN	고속:15M/MIN (INVERTER : 2~15M/MIN) 저속:10M/MIN (INVERTER : 2~10M/MIN)	12	모터구동식	INVERTER 포함
	KDC20/10-L18-MA			18		
	KDC20/10-L24-MA			24		
	KDC20/10-L30-MA			30		

불법복제 및 배포금지

192.168.11.51 / 2020-03-16 10:52:57

불법복제 및 배포금지

제 2012-BJ-0009 호

안 전 인 증 서

정호엔지니어링

경기도 광명시 노동사동 440-5

위 사업장에서 제조하는 아래의 품목이 산업안전보건법 제34조 및 같은 법 시행규칙 제58조의4제4항에 따른 안전인증 심사 결과 안전 · 보건기준에 적합하므로 안전인증표시의 사용을 인증합니다.

품 목

양중기용 과부하방지장치

형식 · 모델/용량 · 등급/인증번호

형식·모델	용량·등급	인증번호
JDL-100	J-2	12-AV2BJ-0009

인 증 기 준

방호장치 의무안전인증 고시(고용노동부고시 제2010-36호)

인 증 조 건

아래 주소에서 생산되는 제품에 한함.

정호엔지니어링, 경기도 광명시 노동사동 440-5

2012년 06월 11일

한국산업안전보건공단 이사장

192.168.11.51 / 2020-03-16 10:52:57

형식번호	KDC20/10-MA
모 델 명	KDC20/10-L12-MA

NO	DESCRIPTION	MATERIAL	Q'TY	SIZE	REMARK
1	O.L.P	PUR.	1		
2	PUSH BUTTON	PUR.	1		
3	SAFETY LATCH	SS400	2		
4	UPPER LIMIT S/W	SS400	2		
5	T/S RAIL	SS400	-		

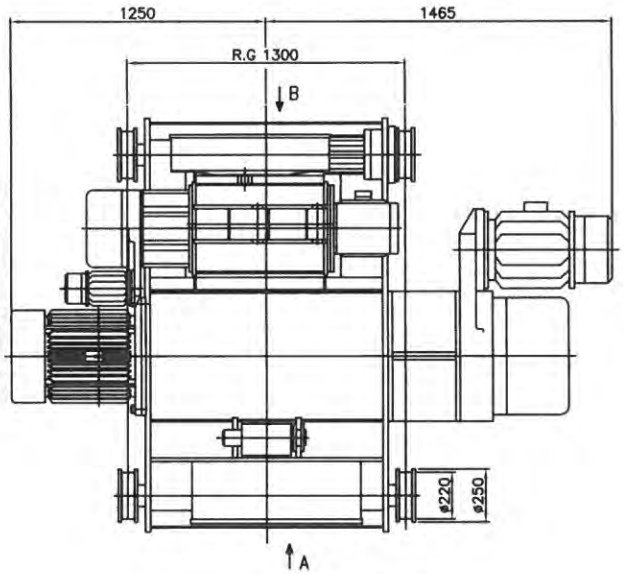

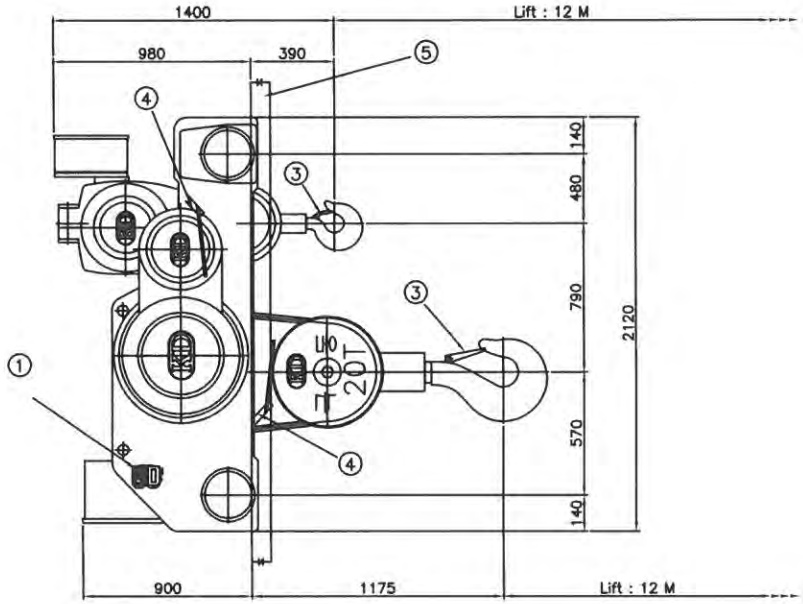

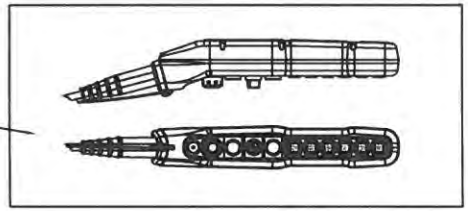

극동호이스트
제한하중
20,000 kg

VIEW-A

극동호이스트
제한하중
10,000 kg

VIEW-B

SPECIFICATION				
HOISTING LOAD			20,000 KG	10,000 KG
TEST LOAD			25,000 KG	12,500 KG
LIFT			12 M	
RATING			30 MIN	
HOISTING		SPEED	4.2/0.42 M/MIN	4.5/0.45 M/MIN
		MOTOR	17/1.8 KW x 8P	9.0/1.1 KW x 8P
TRAVERSING	HIGH	SPEED	15 M/MIN (INVERTER : 2~15M/MIN)	
		MOTOR	1.5 KW x 4P	
	LOW	SPEED	10 M/MIN (INVERTER : 2~10M/MIN)	
		MOTOR	1.0 KW x 6P	
WIRE ROPE			(6x37) ø22.4x4FALLS	ø16x4FALLS
POWER SOURCE			AC ø3 220V(380,440,460,480V) 60Hz	
TRAVERSING RAIL			22 KG/M	
GROSS WEIGHT			3950 KG	

REV	DATE	DESCRIPTION	DRAWN	CHECK	APPRVD
A	13.FEB.2020	REDRAWING	K.H.Han	-	-

PROJECT

CLIENT

MANUFACTURER: 극동호이스트 주식회사 KUKDONG HOIST CO., LTD.

TITLE: ARRANGEMENT DRAWING KDC20/10-L12-MA

SCALE	DWG. NO.	SHT. NO.	REV.
N/S			

192.168.11.51 / 2020-03-16 10:52:57

불법복제 및 배포금지

형식번호	KDC20/10-MA
모 델 명	KDC20/10-L18-MA

NO	DESCRIPTION	MATERIAL	Q'TY	SIZE	REMARK
1	O.L.P	PUR.	1		
2	PUSH BUTTON	PUR.	1		
3	SAFETY LATCH	SS400	2		
4	UPPER LIMIT S/W	SS400	2		
5	T/S RAIL	SS400	-		

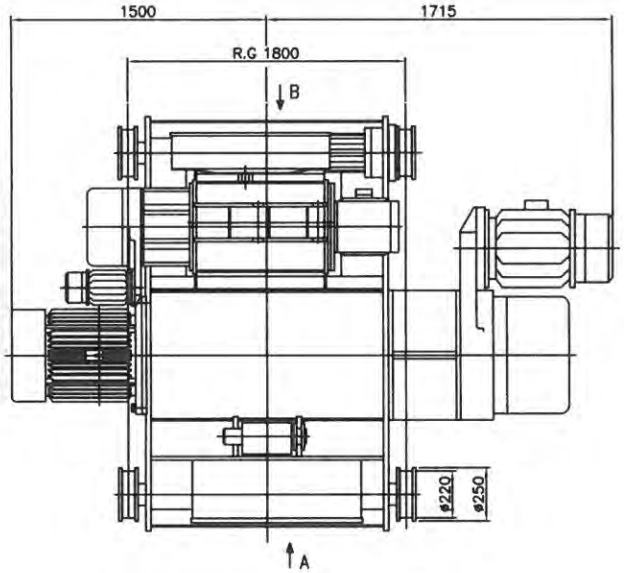

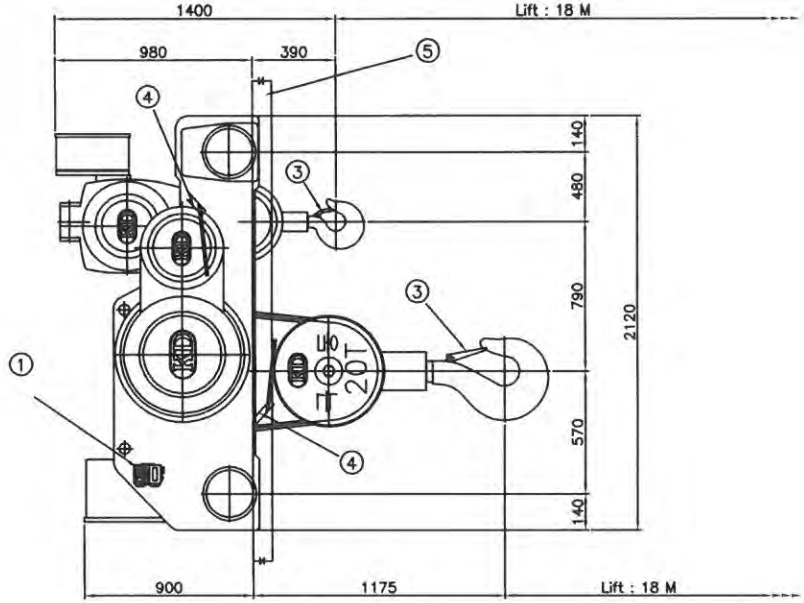

극동호이스트
제한하중
20,000 kg

VIEW-A

극동호이스트
제한하중
10,000 kg

VIEW-B

SPECIFICATION				
HOISTING LOAD			20,000 KG	10,000 KG
TEST LOAD			25,000 KG	12,500 KG
LIFT			18 M	
RATING			30 MIN	
HOISTING		SPEED	4.2/0.42 M/MIN	4.5/0.45 M/MIN
		MOTOR	17/1.8 KW x 8P	9.0/1.1 KW x 8P
TRAVERSING	HIGH	SPEED	15 M/MIN (INVERTER : 2~15M/MIN)	
		MOTOR	1.5 KW x 4P	
	LOW	SPEED	10 M/MIN (INVERTER : 2~10M/MIN)	
		MOTOR	1.0 KW x 6P	
WIRE ROPE			(6x37) ø22.4x4FALLS	ø16x4FALLS
POWER SOURCE			AC ø3 220V(380,440,460,480V) 60Hz	
TRAVERSING RAIL			22 KG/M	
GROSS WEIGHT			4150 KG	

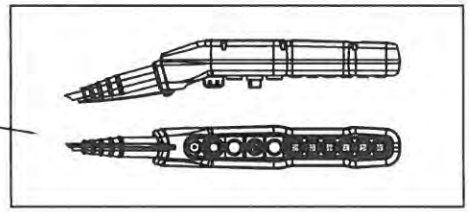

REV	DATE	DESCRIPTION	DRAWN	CHECK	APPRVD
A	13.FEB.2020	REDRAWING	K.H.Han	-	-

PROJECT

CLIENT

MANUFACTURER: 극동호이스트 주식회사 KUKDONG HOIST CO., LTD.

TITLE: ARRANGEMENT DRAWING KDC20/10-L18-MA

SCALE	DWG. NO.	SHT. NO.	REV.
N/S			

불법복제 및 배포금지

192.168.11.51 / 2020-03-16 10:52:57

형식번호	KDC20/10-MA
모 델 명	KDC20/10-L24-MA

NO	DESCRIPTION	MATERIAL	Q'TY	SIZE	REMARK
1	O.L.P	PUR.	1		
2	PUSH BUTTON	PUR.	1		
3	SAFETY LATCH	SS400	2		
4	UPPER LIMIT S/W	SS400	2		
5	T/S RAIL	SS400	-		

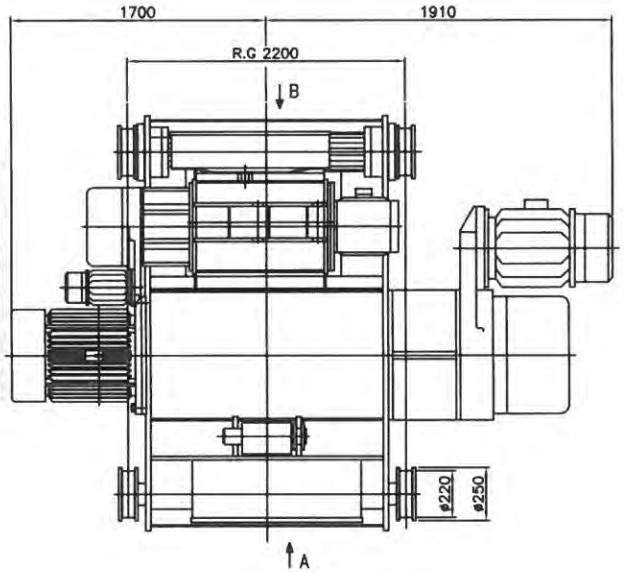

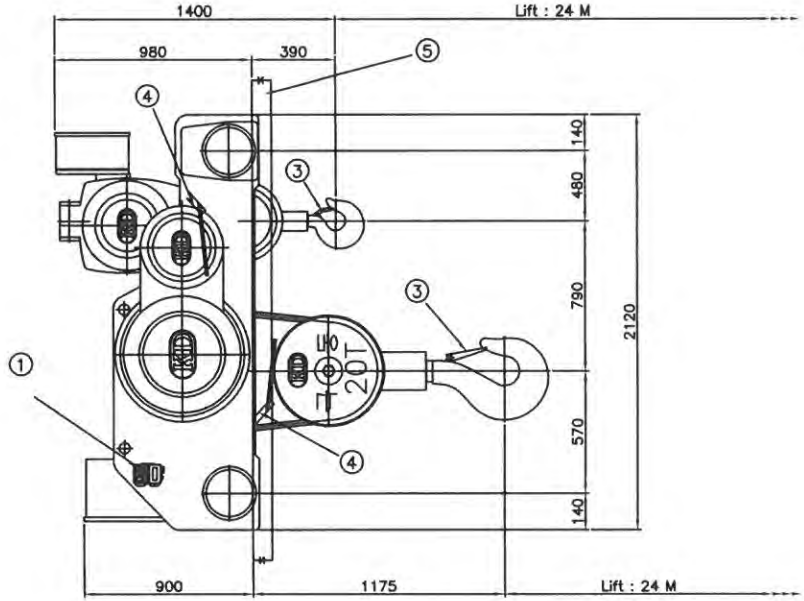

극동호이스트
제한하중
20,000 kg

VIEW-A

극동호이스트
제한하중
10,000 kg

VIEW-B

SPECIFICATION				
HOISTING LOAD			20,000 KG	10,000 KG
TEST LOAD			25,000 KG	12,500 KG
LIFT			24 M	
RATING			30 MIN	
HOISTING		SPEED	4.2/0.42 M/MIN	4.5/0.45 M/MIN
		MOTOR	17/1.8 KW x 8P	9.0/1.1 KW x 8P
TRAVERSING	HIGH	SPEED	15 M/MIN (INVERTER : 2~15M/MIN)	
		MOTOR	1.5 KW x 4P (2 UNITS)	
	LOW	SPEED	10 M/MIN (INVERTER : 2~10M/MIN)	
		MOTOR	1.0 KW x 6P (2 UNITS)	
WIRE ROPE			(6x37) ø22.4x4FALLS	ø16x4FALLS
POWER SOURCE			AC ø3 220V(380,440,460,480V) 60Hz	
TRAVERSING RAIL			22 KG/M	
GROSS WEIGHT			4350 KG	

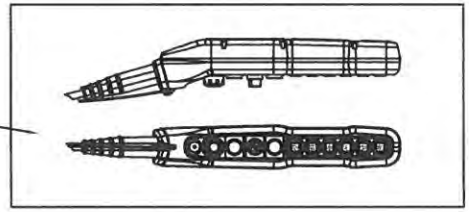

REV	DATE	DESCRIPTION	DRAWN	CHECK	APPRVD
A	13.FEB.2020	REDRAWING	K.H.Han	-	-

PROJECT

CLIENT

MANUFACTURER: 극동호이스트 주식회사 KUKDONG HOIST CO., LTD.

TITLE: ARRANGEMENT DRAWING KDC20/10-L24-MA

SCALE	DWG. NO.	SHT. NO.	REV.
N/S			

192.168.11.51 / 2020-03-16 10:52:57
불법복제 및 배포금지

형식번호	KDC20/10-MA
모 델 명	KDC20/10-L30-MA

NO	DESCRIPTION	MATERIAL	Q'TY	SIZE	REMARK
1	O.L.P	PUR.	1		
2	PUSH BUTTON	PUR.	1		
3	SAFETY LATCH	SS400	2		
4	UPPER LIMIT S/W	SS400	2		
5	T/S RAIL	SS400	-		

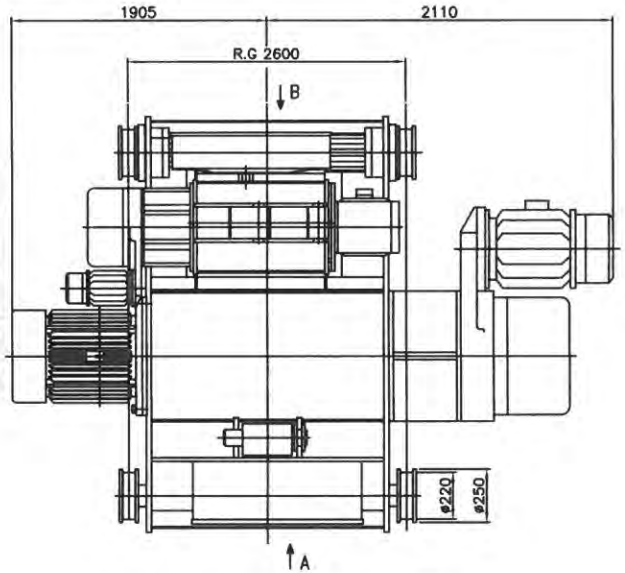

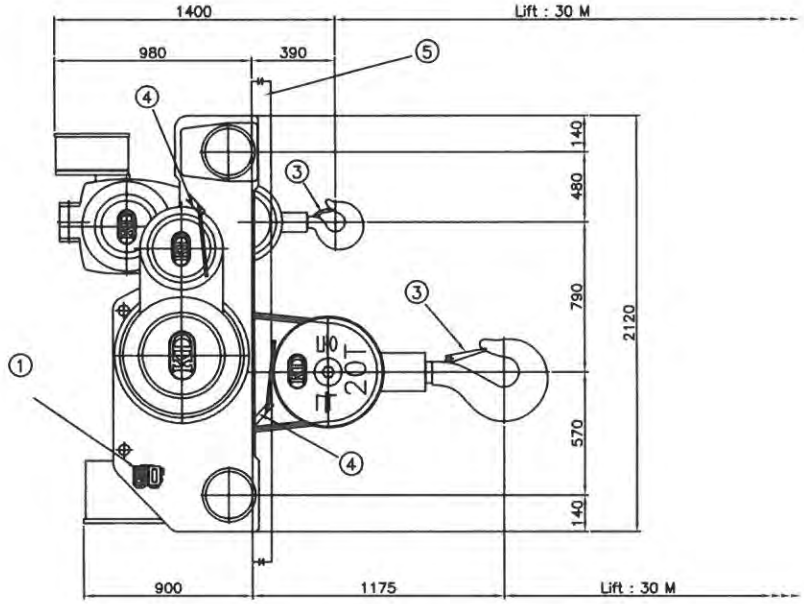

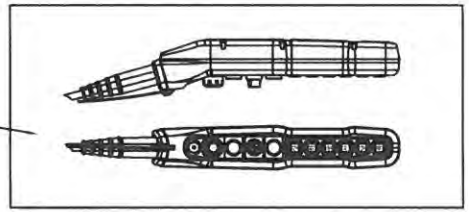

극동호이스트
제한하중
20,000 kg

VIEW-A

극동호이스트
제한하중
10,000 kg

VIEW-B

SPECIFICATION				
HOISTING LOAD			20,000 KG	10,000 KG
TEST LOAD			25,000 KG	12,500 KG
LIFT			30 M	
RATING			30 MIN	
HOISTING		SPEED	4.2/0.42 M/MIN	4.5/0.45 M/MIN
		MOTOR	17/1.8 KW x 8P	9.0/1.1 KW x 8P
TRAVERSING	HIGH	SPEED	15 M/MIN (INVERTER : 2~15M/MIN)	
		MOTOR	1.5 KW x 4P (2 UNITS)	
	LOW	SPEED	10 M/MIN (INVERTER : 2~10M/MIN)	
		MOTOR	1.0 KW x 6P (2 UNITS)	
WIRE ROPE			(6x37) ø22.4x4FALLS	ø16x4FALLS
POWER SOURCE			AC ø3 220V(380,440,460,480V) 60Hz	
TRAVERSING RAIL			22 KG/M	
GROSS WEIGHT			4600 KG	

REV	DATE	DESCRIPTION	DRAWN	CHECK	APPRVD
A	13.FEB.2020	REDRAWING	K.H.Han	-	-

PROJECT

CLIENT

MANUFACTURER: 극동호이스트 주식회사 KUKDONG HOIST CO., LTD.

TITLE: ARRANGEMENT DRAWING KDC20/10-L30-MA

SCALE	DWG. NO.	SHT. NO.	REV.
N/S			

192.168.11.51 / 2020-03-16 10:52:57
불법복제 및 배포금지

ADR'S NO.

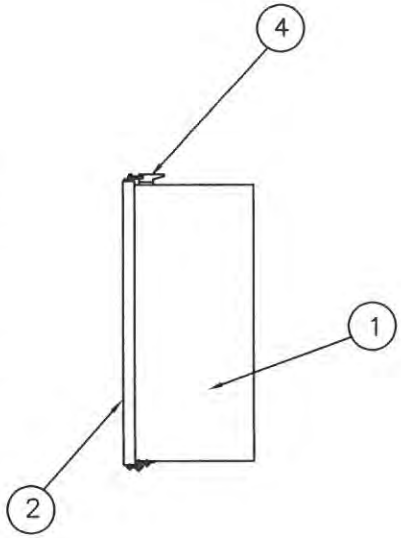

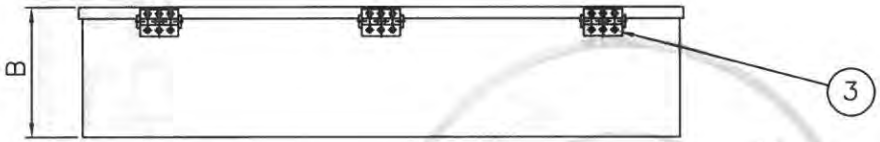

NO	DESCRIPTION	MT'L	REMARKS
1	PANEL CASE	SPC	1.6t
2	PANEL COVER	SPC	1.6t
3	HINGE	PUR'	
4	CLAMP	PUR'	
5	SPONGE	PUR'	

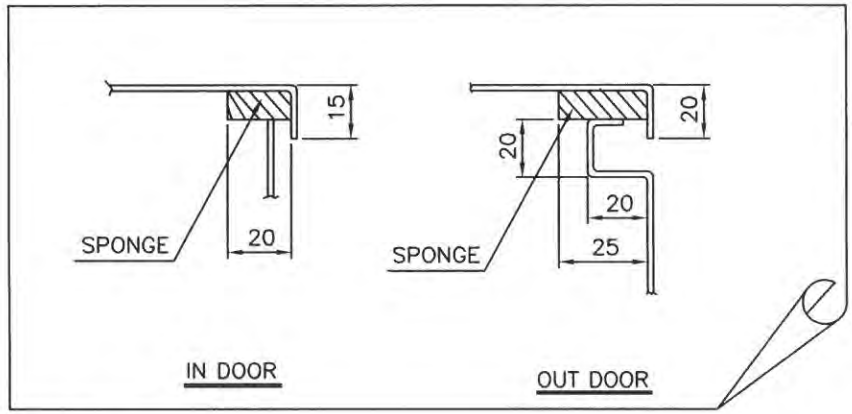

N O T E

1.PROTECTION DEGREE ;
A, INDOOR TYPE : DUST PROOF
B, OUT DOOR TYPE : SPLASH PROOF
2.FINAL PAINTING COLOR (MANSELL NO.)
A. IN SIDE : 10B 3/5
B. OUT SIDE : 10B 3/5
3.PAINTING THICKNESS :ABOVE 40 um
4.APPLICATION VOLTAGE :220V,380V,440V,460V,480V
5.CONTROL VOLTAGE : 1ø 110,120V 60HZ
6. 제어용 전선 : 1.5sq KIV, HIV
7. 외함 개방 구조는 다음과 같다.
1)외함 개방시 충전부분이 차단되도록 한다.
2)외함 개방후 충전 부분은 IP2X 이상의 직접접촉 방호가 되어 있을것

SELECTION	HOIST CAPACITY	DESCRIPTION	IN DOOR			OUT DOOR			REMARK
			A	B	L	A	B	L	
	20 TON	CREEP	650	220	850	650	220	850	
		TRAVERSING	210	125	380	210	125	380	

192.168.11.51 / 2020-03-16 10:52:57

불법복제 및 배포금지

MK	DATE	REVISIONS	CHK.	APP.
4				
3				
2				
1				

CUSTOMER	KDC20/10T
DRAWING TITLE	HOISTING CONTROL BOX LAY-OUT

DRAWING	DESIGN	CHECKED	APPROVED	SCALE	DATE	ORDER NO.
				NONE		

극동호이스트 주식회사
KUK DONG HOIST CO., LTD.

DWG. NO

ADR'S NO.

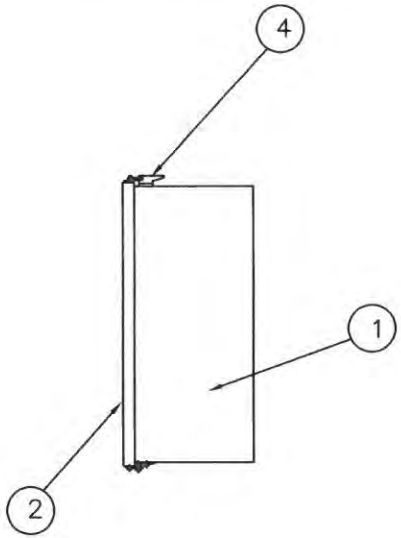

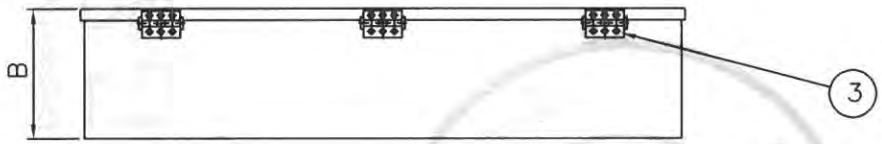

NO	DESCRIPTION	MT'L	REMARKS
1	PANEL CASE	SPC	1.6t
2	PANEL COVER	SPC	1.6t
3	HINGE	PUR'	
4	CLAMP	PUR'	
5	SPONGE	PUR'	

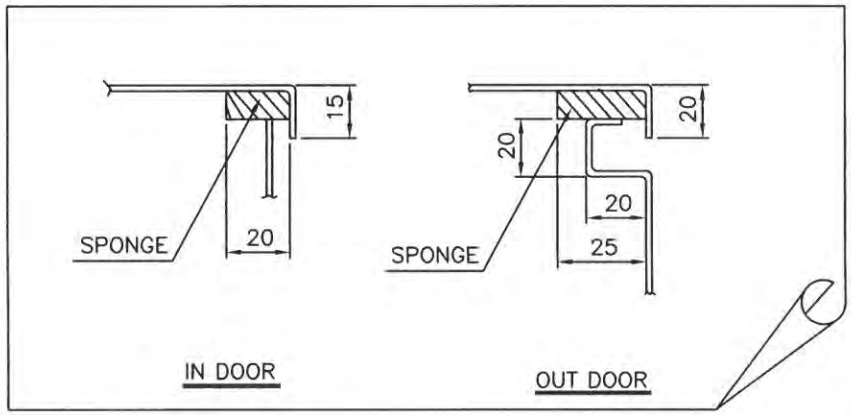

SELECTION	HOIST CAPACITY	DESCRIPTION	IN DOOR			OUT DOOR			REMARK
			A	B	L	A	B	L	
☞	10 TON	HOISTING	440	200	690	440	200	690	

NOTE

1.PROTECTION DEGREE ;
A, INDOOR TYPE : DUST PROOF
B, OUT DOOR TYPE : SPLASH PROOF
2.FINAL PAINTING COLOR (MANSELL NO.)
A. IN SIDE : 10B 3/5
B. OUT SIDE : 10B 3/5
3.PAINTING THICKNESS :ABOVE 40 um
4.APPLICATION VOLTAGE : 220,380,440,460,480V
5.제어용 전선 :1.5sq KIV,HIV
6. 외함 개방 구조는 다음과 같다.
1)외함 개방시 충전부분이 차단되도록 한다.
2)외함 개방 후 충전부분은 IP2X 이상의 직접접촉 방호가 되어 있을것

불법복제 및 배포금지

192.168.11.51 / 2020-03-16 10:52:57

MK	DATE	REVISIONS	CHK.	APP.
4				
3				
2				
1				

CUSTOMER	KDWMA-20/10T18L-C
DRAWING TITLE	HOISTING CONTROL BOX
	LAY-OUT

DRAWING	DESIGN	CHECKED	APPROVED	SCALE	DATE	ORDER NO.
				NONE		

극동호이스트 주식회사
KUK DONG HOIST CO., LTD

DWG. NO

1	2	3	4	5	6	7	8	9	10	11	12	13	14	15	16	17	18	19	20

POWER CIRCUIT

TRAVELLING POWER SUPPLY SYSTEM

ADR'S NO. A1

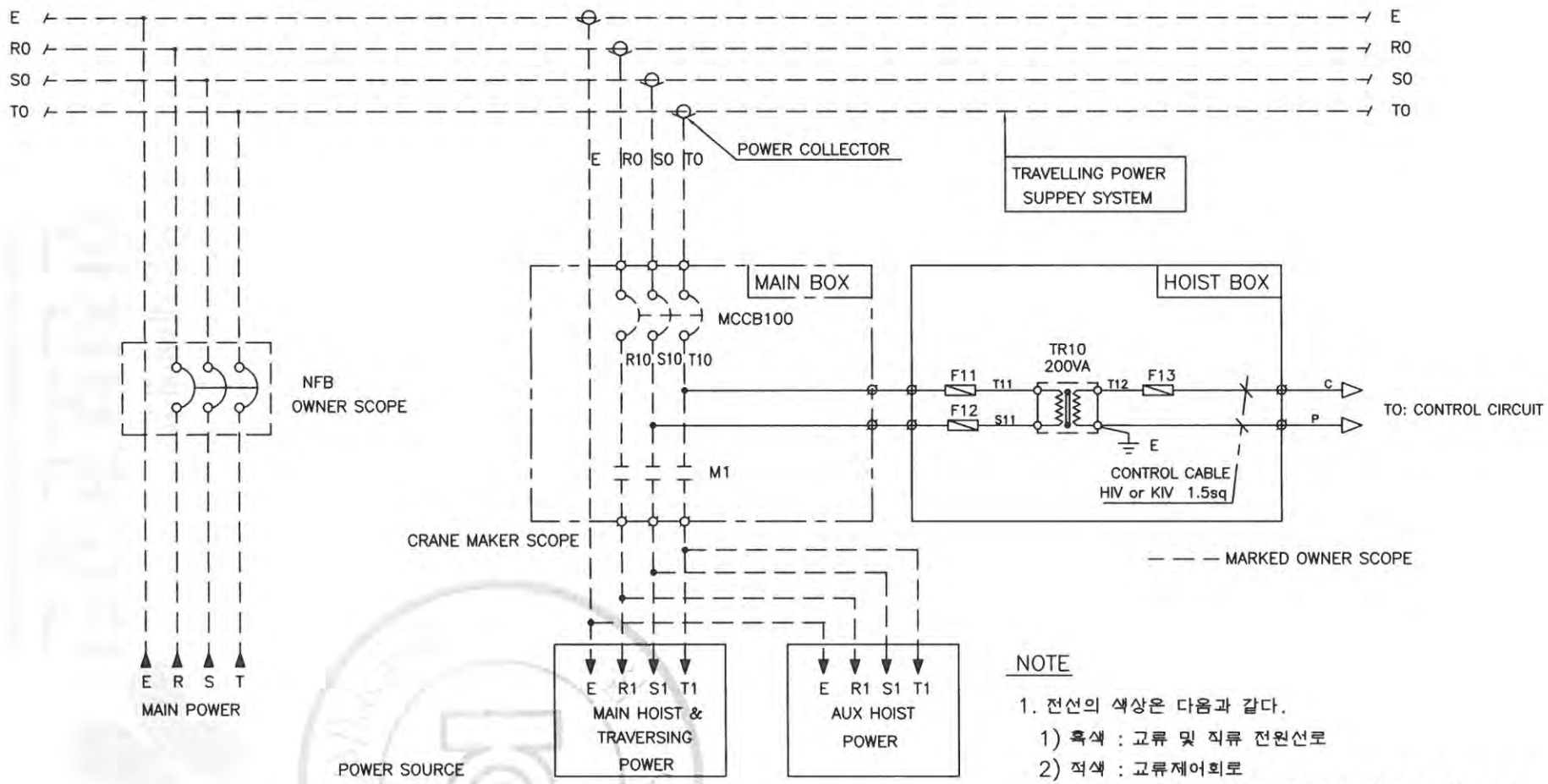

POWER SOURCE
AC 3ø 60Hz

SELECTION	VOLTAGE	F11 F12	F13	MCCB100
	220V	3A	5A	125AF/125AT
	380V	3A	5A	125AF/75AT
	440V	3A	5A	60AF/60AT
	460V	3A	5A	60AF/60AT
	480V	3A	5A	60AF/60AT

NOTE

1. 전선의 색상은 다음과 같다.
   1) 흑색 : 교류 및 직류 전원선로
   2) 적색 : 교류제어회로
   3) 주황색 : 외부 전원에서 공급되는 연동장치 제어회로
   4) 녹색 또는 녹색과 황색 혼용 : 접지선
   5) 청색 : 직류 제어선로
2. 제어용 전선 : 1.5mm KIV,HIV
3. 제작시 다소 변경 될수있음.
4. 외함 개방구조는 다음과 같을것.
   외함 개방후 충전되어있는 부분은 IP2X 이상의 직접 접촉 방호가 되어있을것.

MK	DATE	REVISIONS	CHK.	APP.
4				
3				
2				
1				

CUSTOMER		DRAWING	DESIGN	CHECKED	APPROVED	SCALE	DATE	ORDER NO.
DRAWING TITLE	MAIN POWER CIRCUIT 1 DIAGRAM					NONE		
		극동호이스트 주식회사 KUK DONG HOIST CO., LTD.				DWG. NO		

192.168.11.51 / 2020-03-16 10:52:57

불법복제 및 배포금지

ADR'S NO.

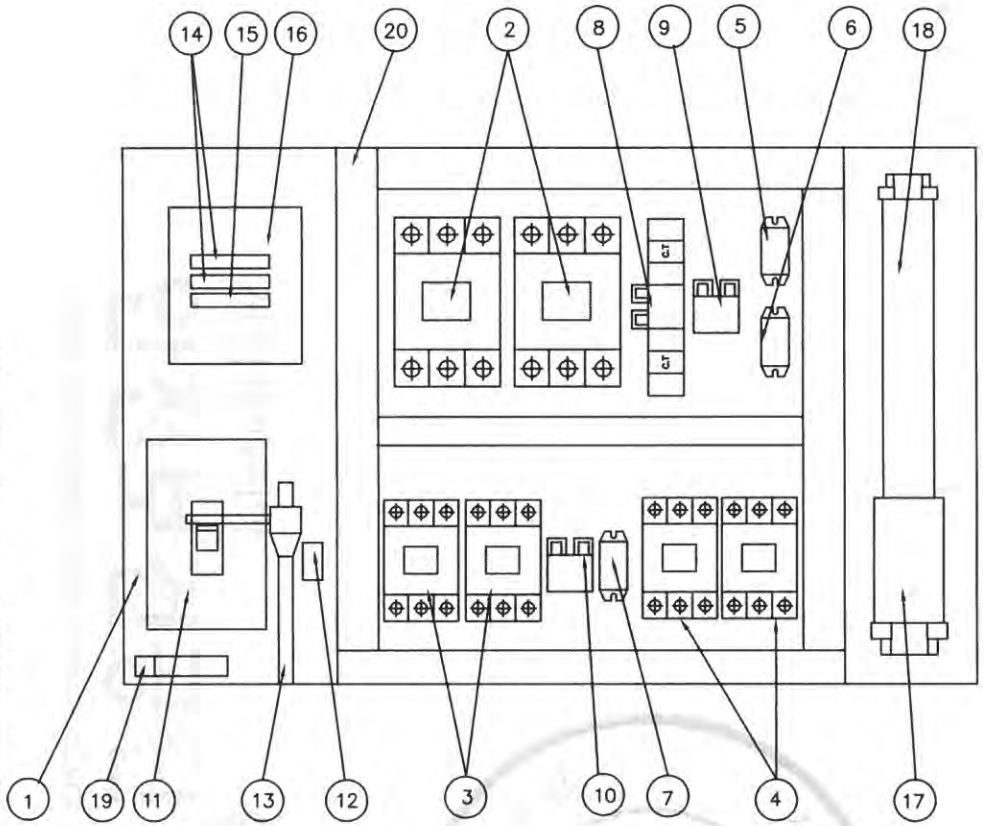

NO	DESCRIPTION	SPECIFICATION	Q'TY	REMARK
1	CHASSIS PLATE		1	아 연 도 금
2	MAGNET CONTACT	MC-185a	2	HOISTING
3	MAGNET CONTACT	DMC22b	2	CREEP HOISTING
4	MAGNET CONTACT	DMC22b	2	TRAVERSING
5	SILICON RECTIFIER	SR-60	1	HOISTING
6	SILICON RECTIFIER	SR-30	1	CREEP HOISTING
7	SILICON RECTIFIER	SR-30	1	TRAVERSING
8	E.O.C.R	SS-100	1	HOISTING
9	E.O.C.R	SS-30	1	CREEP HOISTING
10	E.O.C.R	SS-30	1	TRAVERSING
11	N.F.B	125AF/125AT	1	LS-2
12	UPPER LIMIT	AC 600V/3A	1	LS-1
13	LIMIT LEVER	SS400	1	
14	FUSE (F11,F12)	3 A	2	
15	FUSE (F13)	5 A	1	
16	TRANSFORMER	220V/110,120V, 200VA	1	
17	TERMINAL BLOCK	100A,25A		
18	TERMINAL BLOCK	15A		
19	EARTH TERMINAL	5tx25x50	1	
20	CABLE DUCT	-	1	

N O T E

1. UPPER LIMIT LS-1의 접점 허용 전류 용량. : AC 600V, 3A
2. UPPER LIMIT LS-2의 접점 허용 전류 용량. : NFB 125AF/125AT
3. EARTH TERMINAL RESISTANCE : 0.018 Ω
4. POWER SOURCE : AC. 3ø 220V 60HZ

NOTE

1. 전선의 색상은 다음과 같다.
   1) 흑색 : 교류 및 직류 전원선로
   2) 적색 : 교류제어회로
   3) 주황색 : 외부 전원에서 공급되는 연동장치 제어회로
   4) 녹색 또는 녹색과 황색 혼용 : 접지선
   5) 청색 : 직류 제어선로
2. CABLE MATERIAL : KIV OR EQUIVALENT, MIN SIZE : 1.5sq
3. 제어용 전선 : 1.5mm KIV,HIV
4. 제작시 다소 변경 될수있음.
5. 외함 개방구조는 다음과 같을것.
   1) 외함 개방시 충전부분이 차단되도록 할것.
   2) 외함 개방후 충전되어있는 부분은 IP2X 이상의 직접 접촉 방호가 되어있을것.

MK	DATE	REVISIONS	CHK.	APP.
4				
3				
2				
1				

CUSTOMER	
DRAWING TITLE	MAIN (20T) HOIST CONTROL BOX ARRANGEMENT DRAWING

DRAWING	DESIGN	CHECKED	APPROVED	SCALE	DATE	ORDER NO.
				NONE		

극동호이스트 주식회사
KUK DONG HOIST CO., LTD

DWG. NO KDC20BA22

192.168.11.51 / 2020-03-16 10:52:57

불법복제 및 배포금지

ADR'S NO.

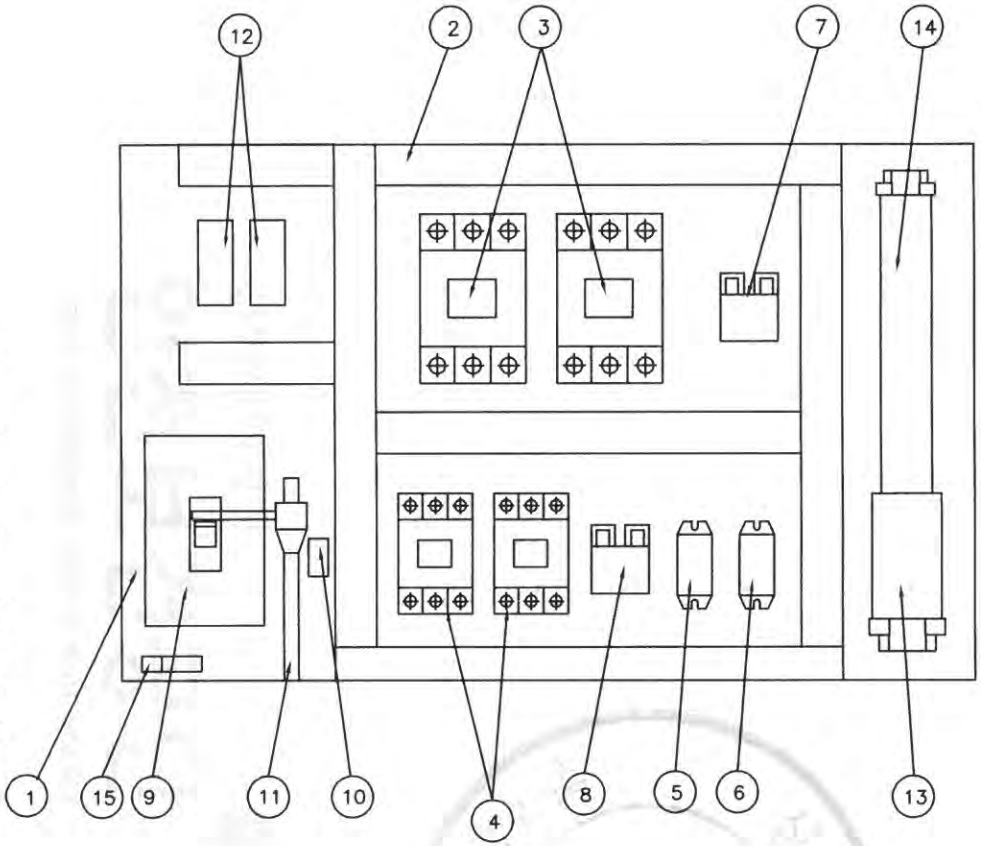

NO	DESCRIPTION	SPECIFICATION	Q'TY	REMARK
1	CHASSIS PLATE		1	아 연 도 금
2	CABLE DUCT	–	1	
3	MAGNET CONTACTOR	MC–130a	2	HOISTING
4	MAGNET CONTACTOR	DMC22b	2	CREEP
5	SILICON RECTIFIER	SR–60	1	HOISTING
6	SILICON RECTIFIER	SR–30	1	CREEP
7	E.O.C.R	SS–60	1	HOISTING
8	E.O.C.R	SS–30	1	CREEP
9	N.F.B	125AF/75AT	1	LS–2
10	UPPER LIMIT	AC 600V/3A	2	LS–1
11	LIMIT LEVER	SS400	1	
12	RELAY & SOCKET	4a4b	1	
13	TERMINAL BLOCK	100A,25A		
14	TERMINAL BLOCK	15A		
15	EARTH TERMINAL	5tx24x50		

NOTE

1. UPPER LIMIT LS–1의 접점 허용 전류 용량. : AC 600V, 3A
2. UPPER LIMIT LS–2의 접점 허용 전류 용량. : NFB 125AF/75AT
3. EARTH TERMINAL RESISTANCE : 0.018 Ω
4. POWER SOURCE : AC. 3ø 220V 60HZ

NOTE

1. 전선의 색상은 다음과 같다.
   1) 흑색 : 교류 및 직류 전원선로
   2) 적색 : 교류제어회로
   3) 주황색 : 외부 전원에서 공급되는 연동장치 제어회로
   4) 녹색 또는 녹색과 황색 혼용 : 접지선
   5) 청색 : 직류 제어선로
2. CABLE MATERIAL : KIV OR EQUIVALENT
   MIN SIZE : 1.5sq
3. 제어용 전선 : 1.5mm KIV,HIV
4. 제작시 다소 변경 될수있음.
5. 외함 개방구조는 다음과 같을것.
   1) 외함 개방시 충전부분이 차단되도록 할것.
   2) 외함 개방후 충전되어있는 부분은 IP2X 이상의 직접 접촉 방호가 되어있을것.

MK	DATE	REVISIONS	CHK.	APP.
4				
3				
2				
1				

CUSTOMER	
DRAWING TITLE	AUX (10T) HOIST CONTROL BOX ARRANGEMENT DRAWING

DRAWING	DESIGN	CHECKED	APPROVED	SCALE	DATE	ORDER NO.
				NONE		

극동호이스트 주식회사
KUK DONG HOIST CO., LTD.

DWG. NO KD10BA02A

192.168.11.51 / 2020-03-16 10:52:57

불법복제 및 배포금지

1	2	3	4	5	6	7	8	9	10	11	12	13	14	15	16	17	18	19	20

POWER CIRCUIT

HOISTING MOTION | CREEP HOIST MOTION

ADR'S NO. B1

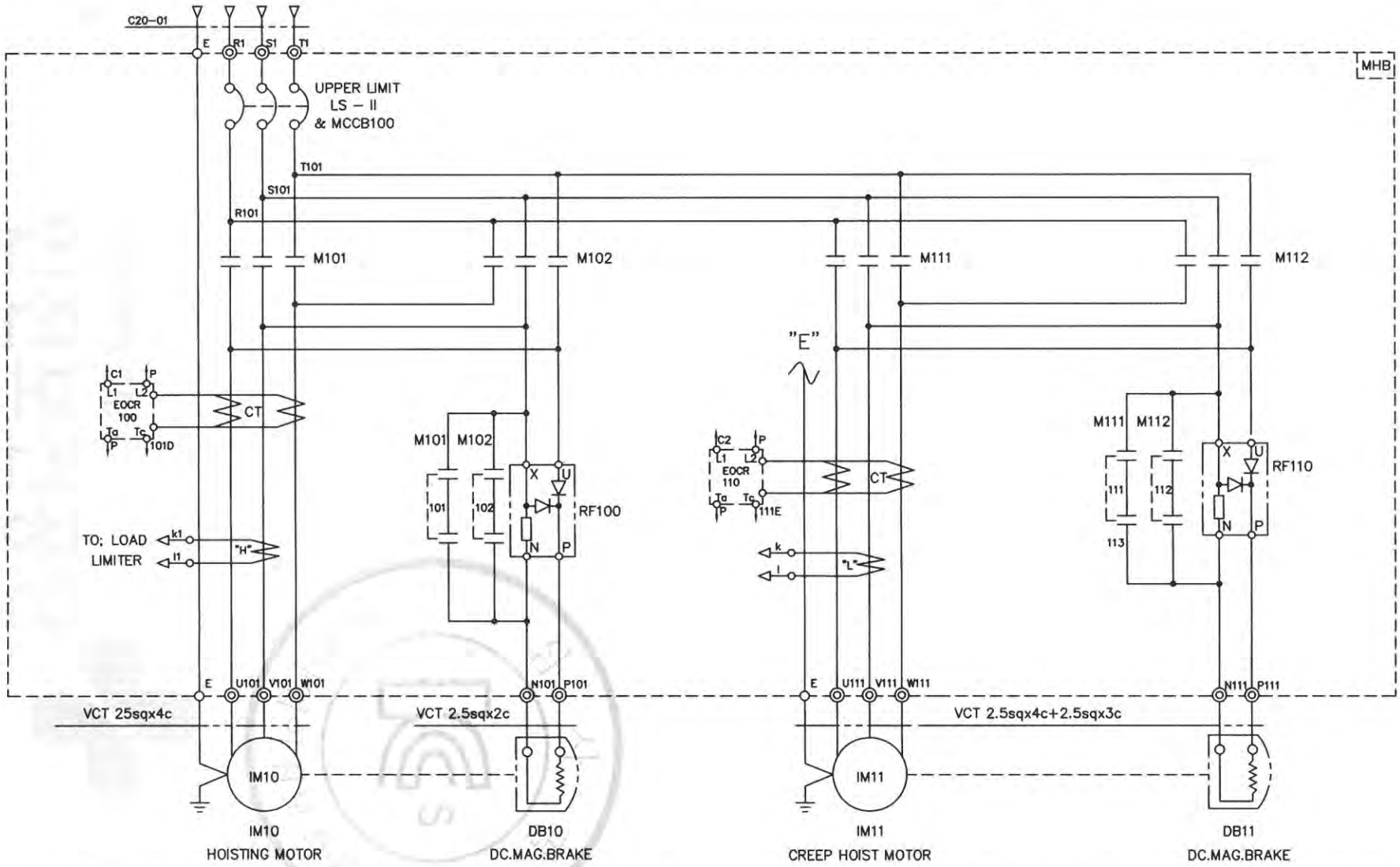

SPECIFICATION / SYMBOLS / DESCRIPTION	HOISTING POWER	HOISTING MOTOR	CREEP MOTOR	DC.MAG' BRAKE	NO FUSE BREAKER	TRANSFORMER	FUSE		MAGNET CONTACTOR		UPPER LIMIT	ELECTRIC OVER CURRENT RELAY		SILICON RECTIFIER		LOAD LIMITER	CABLE
	HOIST	IM 10	IM 11	DB10, 11	LS–II & MCCB100	TR 1	F11,F12	F13	M101,M102	M111,M112	LS–I, LS–II	EOCR100	EOCR110	RF100	RF110	LOAD LIMITER	C20–01
	20TON AC3PH 220V 60Hz	17KWx8P	1.8KWx8P	DC 100V	ABS–103c/125AT	220/110V,120V,200VA	3A	5A	MC–185a	DMC22b	AC 600V 3A	SS–100	SS–30	SR–60	SR–30	JDL–100	VCT 25sqx4c
SELECTION / MAKER	KUKDONG				LS	SHINHAN	–		LS	DONG–A	KUK DONG	ASECO				JUNGHO	DONGIL

MK	DATE	REVISIONS	CHK.	APP.
4				
3				
2				
1				

CUSTOMER

DRAWING TITLE: MAIN (20T) CREEP HOISTING POWER & CONTROL

CIRCUIT DIAGRAM

DRAWING	DESIGN	CHECKED	APPROVED	SCALE	DATE	ORDER NO.
				NONE		

극동호이스트 주식회사
KUK DONG HOIST CO., LTD

DWG. NO KDC20E22

192.168.11.51 / 2020-03-16 10:52:57

불법복제 및 배포금지

1	2	3	4	5	6	7	8	9	10	11	12	13	14	15	16	17	18	19	20

POWER CIRCUIT

ADR'S NO. B1

HOISTING MOTION | CREEP HOIST MOTION

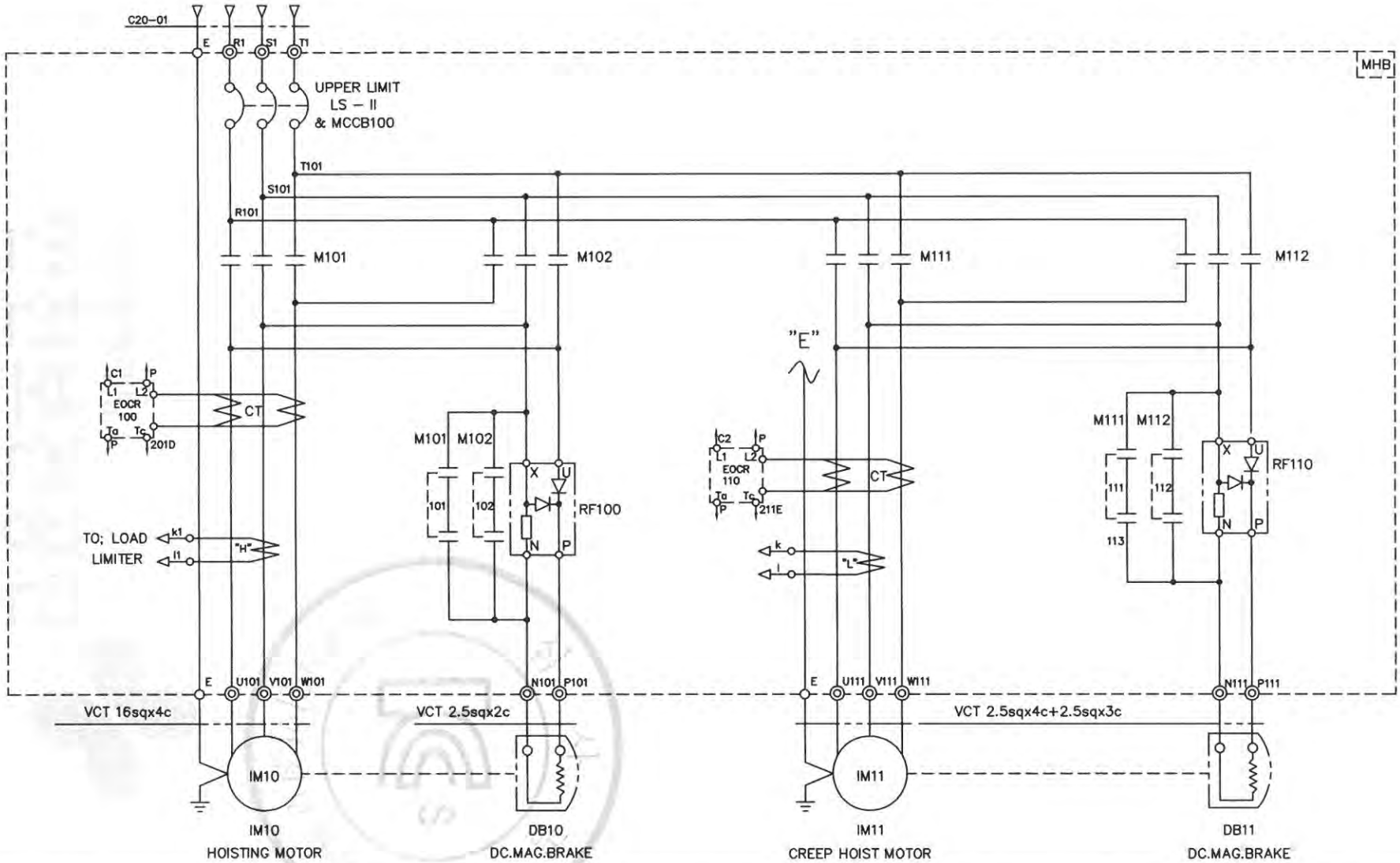

SPECIFICATION / SYMBOLS / DESCRIPTION	HOISTING POWER	HOISTING MOTOR	CREEP MOTOR	DC.MAG' BRAKE	NO FUSE BREAKER	TRANSFORMER	FUSE		MAGNET CONTACTOR		UPPER LIMIT	ELECTRIC OVER CURRENT RELAY		SILICON RECTIFIER		LOAD LIMITER	CABLE
	HOIST	IM 10	IM 11	DB10, 11	LS-II & MCCB100	TR 1	F11,F12	F13	M101,M102	M111,M112	LS-I, LS-II	EOCR100	EOCR110	RF100	RF110	LOAD LIMITER	C20-01
	10TON AC3PH 220V 60Hz	9KWx8P	1.1KWx8P	DC 100V	ABS-103c/75AT	220/110V,120V,200VA	3A	5A	MC-130a	DMC22b	AC 600V 3A	SS-60	SS-30	SR-60	SR-30	JDL-100	VCT 16sqx4c
SELECTION MAKER	KUKDONG				LS	SHINHAN	-		LS	DONG-A	KUK DONG	ASECO				JUNGHO	DONGIL

MK	DATE	REVISIONS	CHK.	APP.
4				
3				
2				
1				

CUSTOMER		DRAWING	DESIGN	CHECKED	APPROVED	SCALE	DATE	ORDER NO.
DRAWING TITLE	AUX (10T) CREEP HOISTING POWER & CONTROL					NONE		
	CIRCUIT DIAGRAM	극동호이스트 주식회사 KUK DONG HOIST CO., LTD				DWG. NO	KDC10E22	

192.168.11.51 / 2020-03-16 10:52:57

불법복제 및 배포금지

1	2	3	4	5	6	7	8	9	10	11	12	13	14	15	16	17	18	19	20
POWER CIRCUIT																			ADR'S NO.
TRAVERSING MOTION																			C1

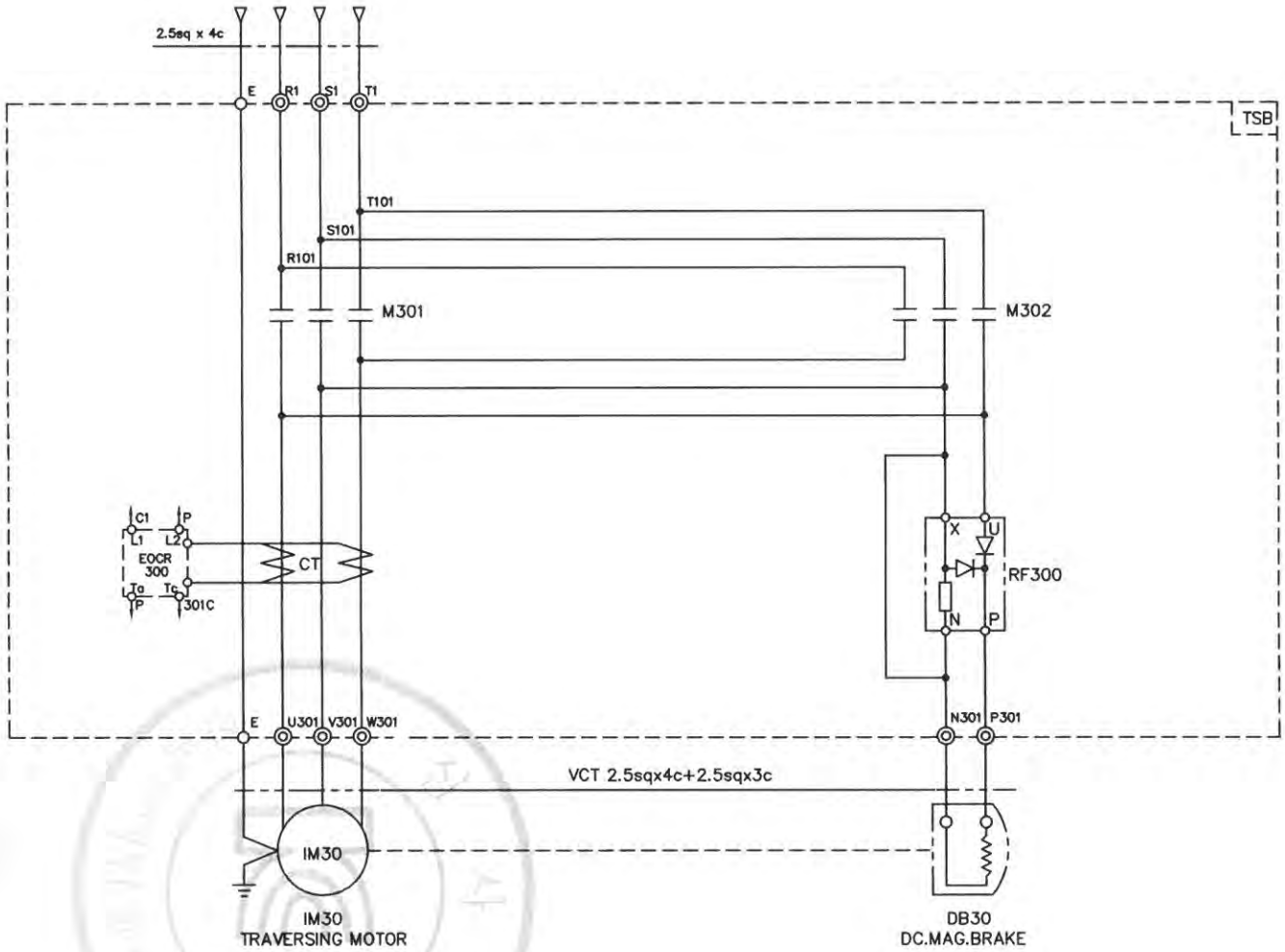

SPECIFICATION / SYMBOLS / DESCRIPTION	TRAVERSING MOTOR	DC MAG' BRAKE	MAGNET CONTACTOR	SILICON RECTIFIER	ELECTRIC OVER CURRENT RELAY	LIMIT SWTCH
	IM 30	DB 30	M301 , M302	RF 300	EOCR 300	LS-301 , LS-302
	1.5KW x 4P AC 3PH 220V 60Hz	DC 100V	DMC22b	SR-30	SS-30	KG-L001
	1.0KW x 6P AC 3PH 220V 60Hz	DC 100V	DMC22b	SR-30	SS-30	KG-L001
SELECTION / MAKER	KUKDONG		DONG-A	ASECO		KG-AUTO

MK	DATE	REVISIONS	CHK.	APP.
4				
3				
2				
1				

CUSTOMER		DRAWING	DESIGN	CHECKED	APPROVED	SCALE	DATE	ORDER NO.
DRAWING TITLE	TRAVERSING POWER CONTROL CIRCUIT DIAGRAM					NONE		
		극동호이스트 주식회사 KUK DONG HOIST CO., LTD				DWG. NO	KDC20E23	

192.168.11.51 / 2020-03-16 10:52:57

불법복제 및 배포금지

1	2	3	4	5	6	7	8	9	10	11	12	13	14	15	16	17	18	19	20
POWER CIRCUIT																			ADR'S NO.
TRAVERSING MOTION																			C2

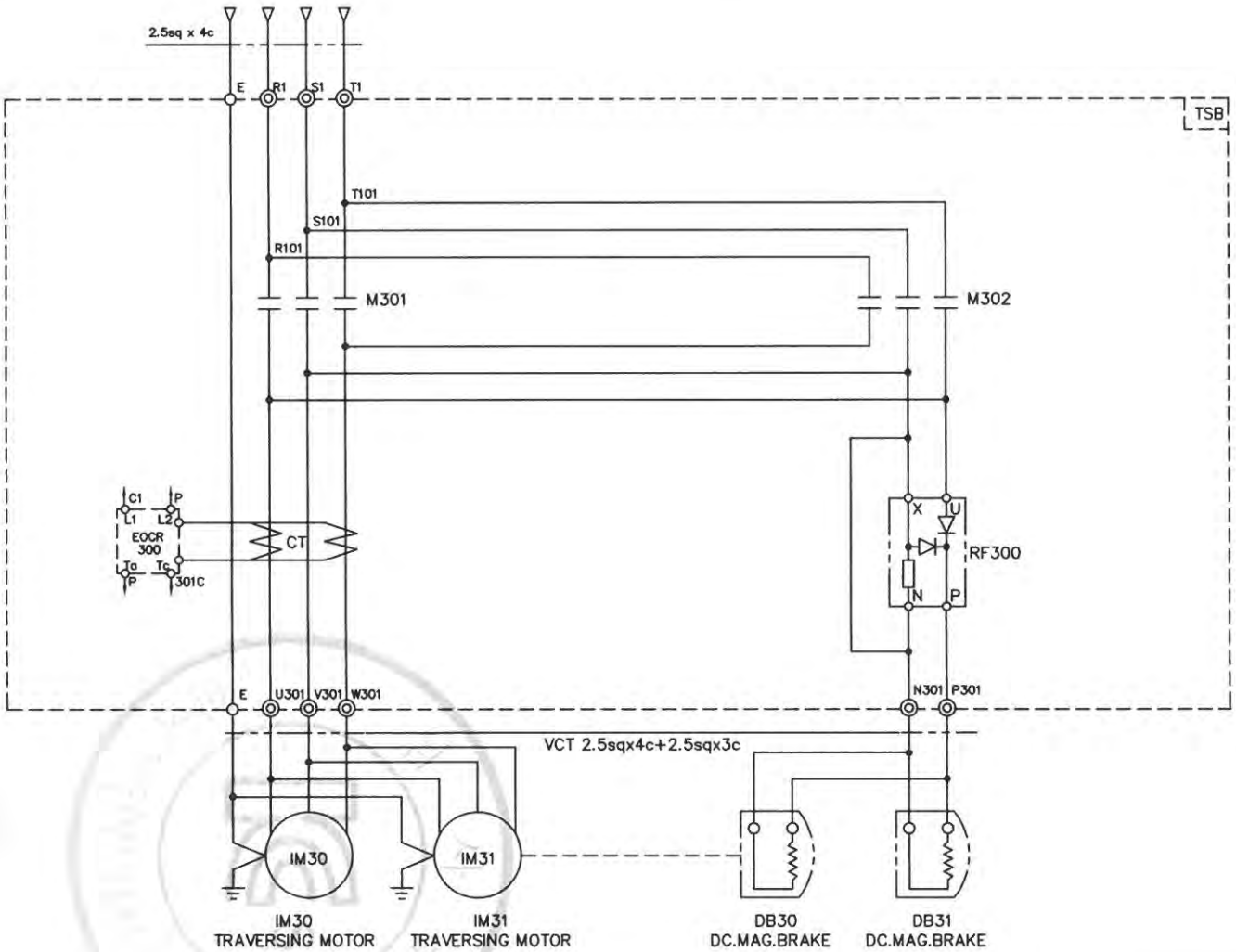

SPECIFICATION / SYMBOLS / DESCRIPTION	TRAVERSING MOTOR	DC MAG' BRAKE	MAGNET CONTACTOR	SILICON RECTIFIER	ELECTRIC OVER CURRENT RELAY	LIMIT SWTCH
	IM 30 , 1M31	DB 30	M301 , M302	RF 300	EOCR 300	LS-301 , LS-302
	1.5KW x 4P AC 3PH 220V 60Hz	DC 100V	DMC22b	SR-30	SS-30	KG-L001
	1.0KW x 6P AC 3PH 220V 60Hz	DC 100V	DMC22b	SR-30	SS-30	KG-L001
SELECTION MAKER	KUK DONG		DONG-A	ASECO		KG-AUTO

MK	DATE	REVISIONS	CHK.	APP.
4				
3				
2				
1				

CUSTOMER		DRAWING	DESIGN	CHECKED	APPROVED	SCALE	DATE	ORDER NO.
DRAWING TITLE	TRAVERSING POWER CONTROL CIRCUIT DIAGRAM					NONE		
		극동호이스트 주식회사 KUK DONG HOIST CO., LTD				DWG. NO	KDC20E24	

192.168.11.51 / 2020-03-16 10:52:57

불법복제 및 배포금지

1	2	3	4	5	6	7	8	9	10	11	12	13	14	15	16	17	18	19	20.

ADR'S NO.

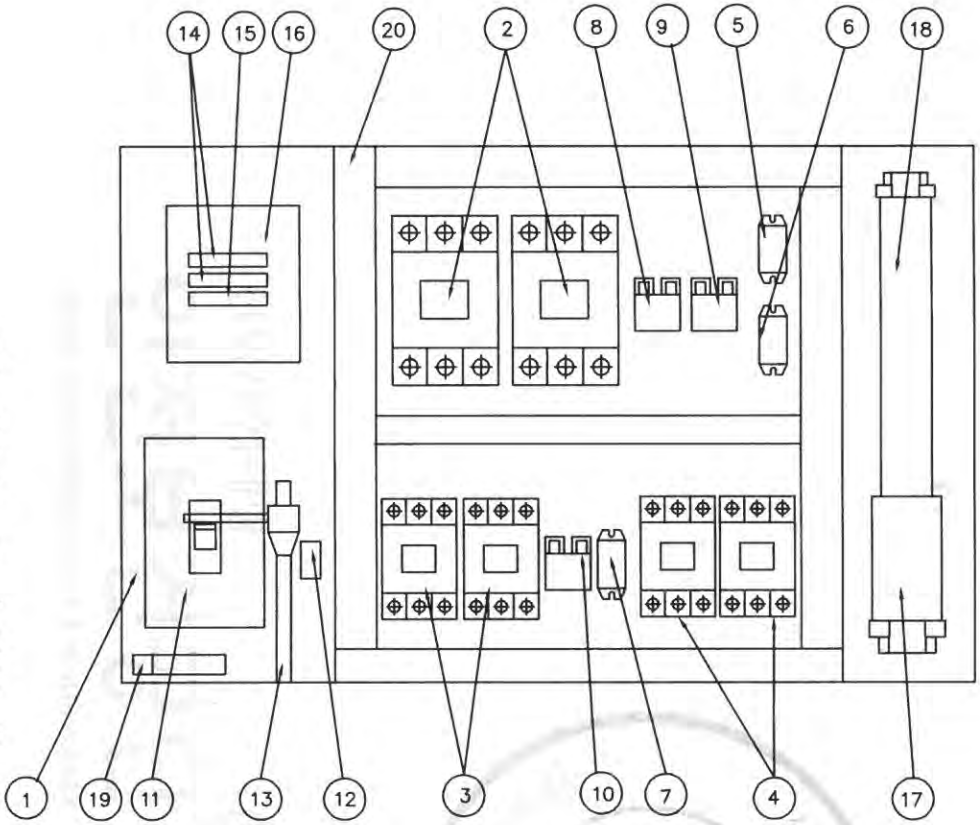

NO	DESCRIPTION	SPECIFICATION	Q'TY	REMARK
1	CHASSIS PLATE		1	아 연 도 금
2	MAGNET CONTACT	MC-130a	2	HOISTING
3	MAGNET CONTACT	DMC22b	2	CREEP HOISTING
4	MAGNET CONTACT	DMC22b	2	TRAVERSING
5	SILICON RECTIFIER	SR-60	1	HOISTING
6	SILICON RECTIFIER	SR-30	1	CREEP HOISTING
7	SILICON RECTIFIER	SR-30	1	TRAVERSING
8	E.O.C.R	SS-60	1	HOISTING
9	E.O.C.R	SS-30	1	CREEP HOISTING
10	E.O.C.R	SS-05	1	TRAVERSING
11	N.F.B	125AF/75AT	1	LS-2
12	UPPER LIMIT	AC 600V/3A	1	LS-1
13	LIMIT LEVER	SS400	1	
14	FUSE (F11,F12)	2 A	2	
15	FUSE (F13)	5 A	1	
16	TRANSFORMER	380V/110,120V, 200VA	1	
17	TERMINAL BLOCK	100A,25A		
18	TERMINAL BLOCK	15A		
19	EARTH TERMINAL	5tx25x50	1	
20	CABLE DUCT	-	1	

불법복제 및 배포금지

192.168.11.51 / 2020-03-16 10:52:57

N O T E

1. UPPER LIMIT LS-1의 접점 허용 전류 용량. : AC 600V, 3A
2. UPPER LIMIT LS-2의 접점 허용 전류 용량. : NFB 125AF/75AT
3. EARTH TERMINAL RESISTANCE : 0.018 Ω
4. POWER SOURCE : AC. 3ø 380V 60HZ

NOTE

1. 전선의 색상은 다음과 같다.
   1) 흑색 : 교류 및 직류 전원선로
   2) 적색 : 교류제어회로
   3) 주황색 : 외부 전원에서 공급되는 연동장치 제어회로
   4) 녹색 또는 녹색과 황색 혼용 : 접지선
   5) 청색 : 직류 제어선로
2. CABLE MATERIAL : KIV OR EQUIVALENT, MIN SIZE : 1.5sq
3. 제어용 전선 : 1.5mm KIV,HIV
4. 제작시 다소 변경 될수있음.
5. 외함 개방구조는 다음과 같을것.
   1) 외함 개방시 충전부분이 차단되도록 할것.
   2) 외함 개방후 충전되어있는 부분은 IP2X 이상의 직접 접촉 방호가 되어있을것.

MK	DATE	REVISIONS	CHK.	APP.
4				
3				
2				
1				

CUSTOMER	
DRAWING TITLE	MAIN (20T) HOIST CONTROL BOX
	ARRANGEMENT DRAWING

DRAWING	DESIGN	CHECKED	APPROVED	SCALE	DATE	ORDER NO.
				NONE		

극동호이스트 주식회사
KUK DONG HOIST CO., LTD

DWG. NO KDC20BA32

1	2	3	4	5	6	7	8	9	10	11	12	13	14	15	16	17	18	19	20.

ADR'S NO.

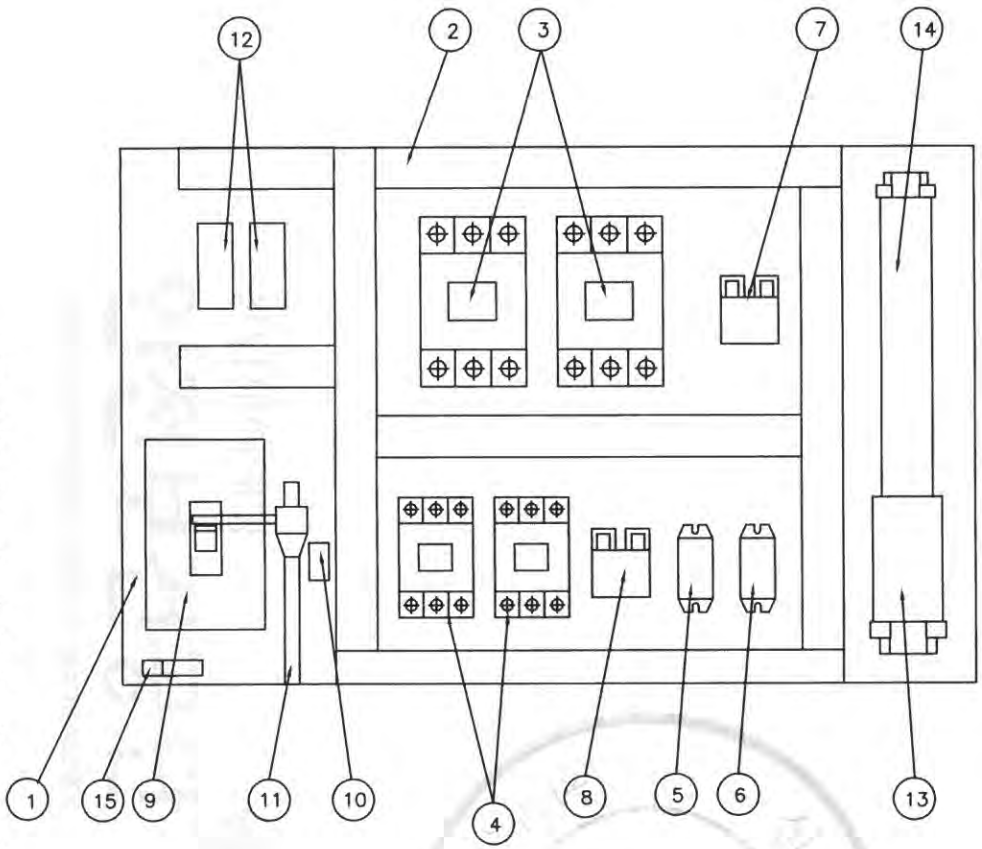

NO	DESCRIPTION	SPECIFICATION	Q'TY	REMARK
1	CHASSIS PLATE		1	아 연 도 금
2	CABLE DUCT	–	1	
3	MAGNET CONTACTOR	DMC85	2	HOISTING
4	MAGNET CONTACTOR	DMC22b	2	CREEP
5	SILICON RECTIFIER	SR–60	1	HOISTING
6	SILICON RECTIFIER	SR–30	1	CREEP
7	E.O.C.R	SS–60	1	HOISTING
8	E.O.C.R	SS–30	1	CREEP
9	N.F.B	50AF/50AT	1	LS–2
10	UPPER LIMIT	AC 600V/3A	2	LS–1
11	LIMIT LEVER	SS400	1	
12	RELAY & SOCKET	4a4b	1	
13	TERMINAL BLOCK	60A,25A		
14	TERMINAL BLOCK	15A		
15	EARTH TERMINAL	5tx24x50		

192.168.11.51 / 2020-03-16 10:52:57

불법복제 및 배포금지

NOTE

1. UPPER LIMIT LS–1의 접점 허용 전류 용량. : AC 600V, 3A
2. UPPER LIMIT LS–2의 접점 허용 전류 용량. : NFB 50AF/50AT
3. EARTH TERMINAL RESISTANCE : 0.018 Ω
4. POWER SOURCE : AC. 3ø 380V 60HZ

NOTE

1. 전선의 색상은 다음과 같다.
   1) 흑색 : 교류 및 직류 전원선로
   2) 적색 : 교류제어회로
   3) 주황색 : 외부 전원에서 공급되는 연동장치 제어회로
   4) 녹색 또는 녹색과 황색 혼용 : 접지선
   5) 청색 : 직류 제어선로
2. CABLE MATERIAL : KIV OR EQUIVALENT
   MIN SIZE : 1.5sq
3. 제어용 전선 : 1.5mm KIV,HIV
4. 제작시 다소 변경 될수있음.
5. 외함 개방구조는 다음과 같을것.
   1) 외함 개방시 충전부분이 차단되도록 할것.
   2) 외함 개방후 충전되어있는 부분은 IP2X 이상의 직접 접촉 방호가 되어있을것.

MK	DATE	REVISIONS	CHK.	APP.
4				
3				
2				
1				

CUSTOMER	
DRAWING TITLE	AUX (10T) HOIST CONTROL BOX ARRANGEMENT DRAWING

DRAWING	DESIGN	CHECKED	APPROVED	SCALE	DATE	ORDER NO.
				NONE		

극동호이스트 주식회사
KUK DONG HOIST CO., LTD.

DWG. NO KD10BA03A

1	2	3	4	5	6	7	8	9	10	11	12	13	14	15	16	17	18	19	20

POWER CIRCUIT

HOISTING MOTION | CREEP HOIST MOTION

ADR'S NO. B1

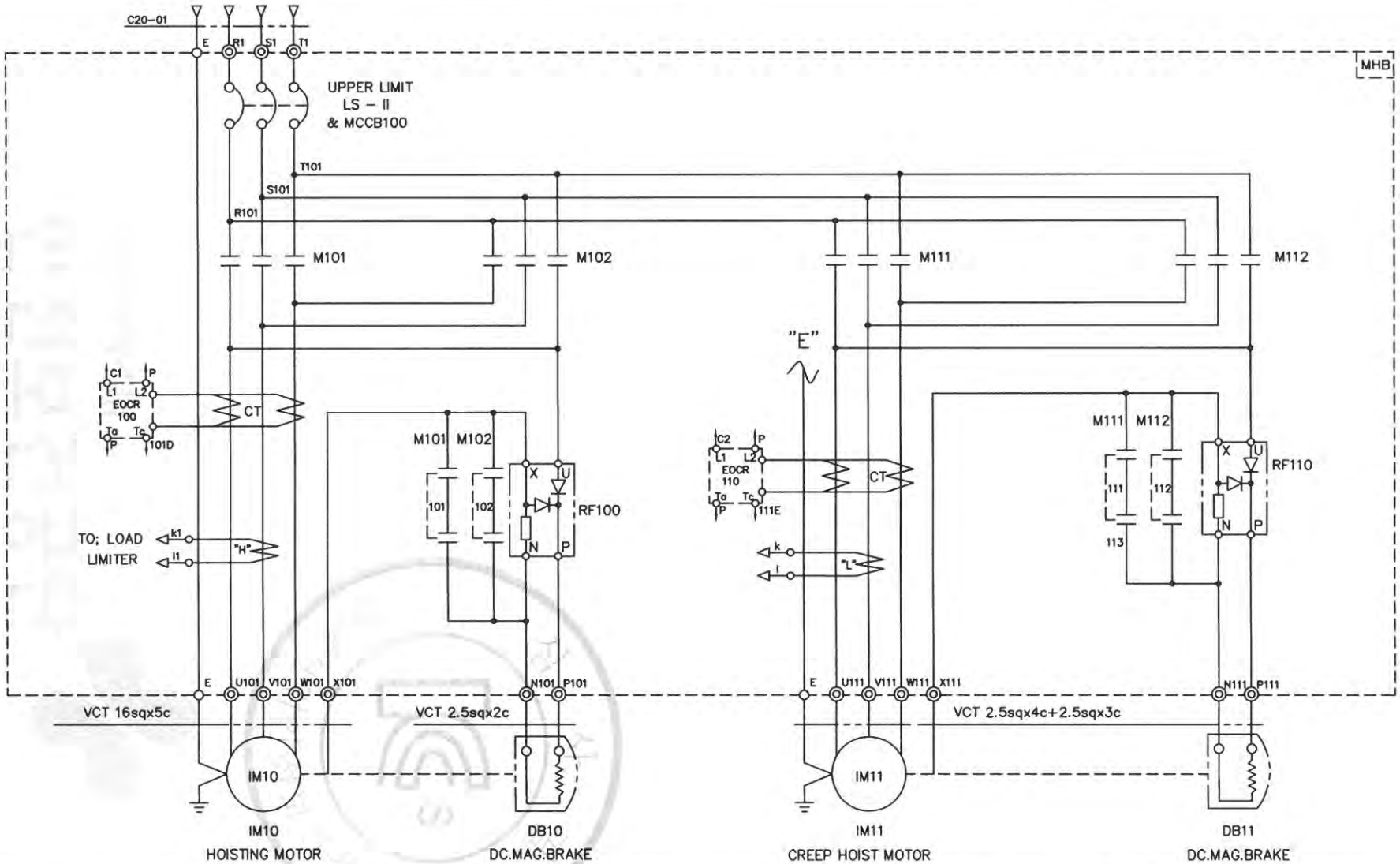

SPECIFICATION / SYMBOLS	HOISTING POWER	HOISTING MOTOR	CREEP MOTOR	DC.MAG' BRAKE	NO FUSE BREAKER	TRANSFORMER	FUSE		MAGNET CONTACTOR		UPPER LIMIT	ELECTRIC OVER CURRENT RELAY		SILICON RECTIFIER		LOAD LIMITER	CABLE
DESCRIPTION	HOIST	IM 10	IM 11	DB10, 11	LS-II & MCCB100	TR 1	F11,F12	F13	M101,M102	M111,M112	LS-I, LS-II	EOCR100	EOCR110	RF100	RF110	LOAD LIMITER	C20-01
	20TON AC3PH 380V 60Hz	17KWx8P	1.8KWx8P	DC 100V	ABS-103c/75AT	380/110V,120V,200VA	2A	5A	MC-130a	DMC22b	AC 600V 3A	SS-60	SS-30	SR-60	SR-30	JDL-100	VCT 16sqx4c
SELECTION / MAKER	KUKDONG				LS	SHINHAN	-		LS	DONG-A	KUK DONG	ASECO				JUNGHO	DONGIL

MK	DATE	REVISIONS	CHK.	APP.
4				
3				
2				
1				

CUSTOMER

DRAWING TITLE: MAIN (20T) CREEP HOISTING POWER & CONTROL

CIRCUIT DIAGRAM

DRAWING	DESIGN	CHECKED	APPROVED	SCALE	DATE	ORDER NO.
				NONE		

극동호이스트 주식회사
KUK DONG HOIST CO., LTD

DWG. NO KDC20E32

192.168.11.51 / 2020-03-16 10:52:57

불법복제 및 배포금지

1	2	3	4	5	6	7	8	9	10	11	12	13	14	15	16	17	18	19	20

POWER CIRCUIT

ADR'S NO. B1

HOISTING MOTION | CREEP HOIST MOTION

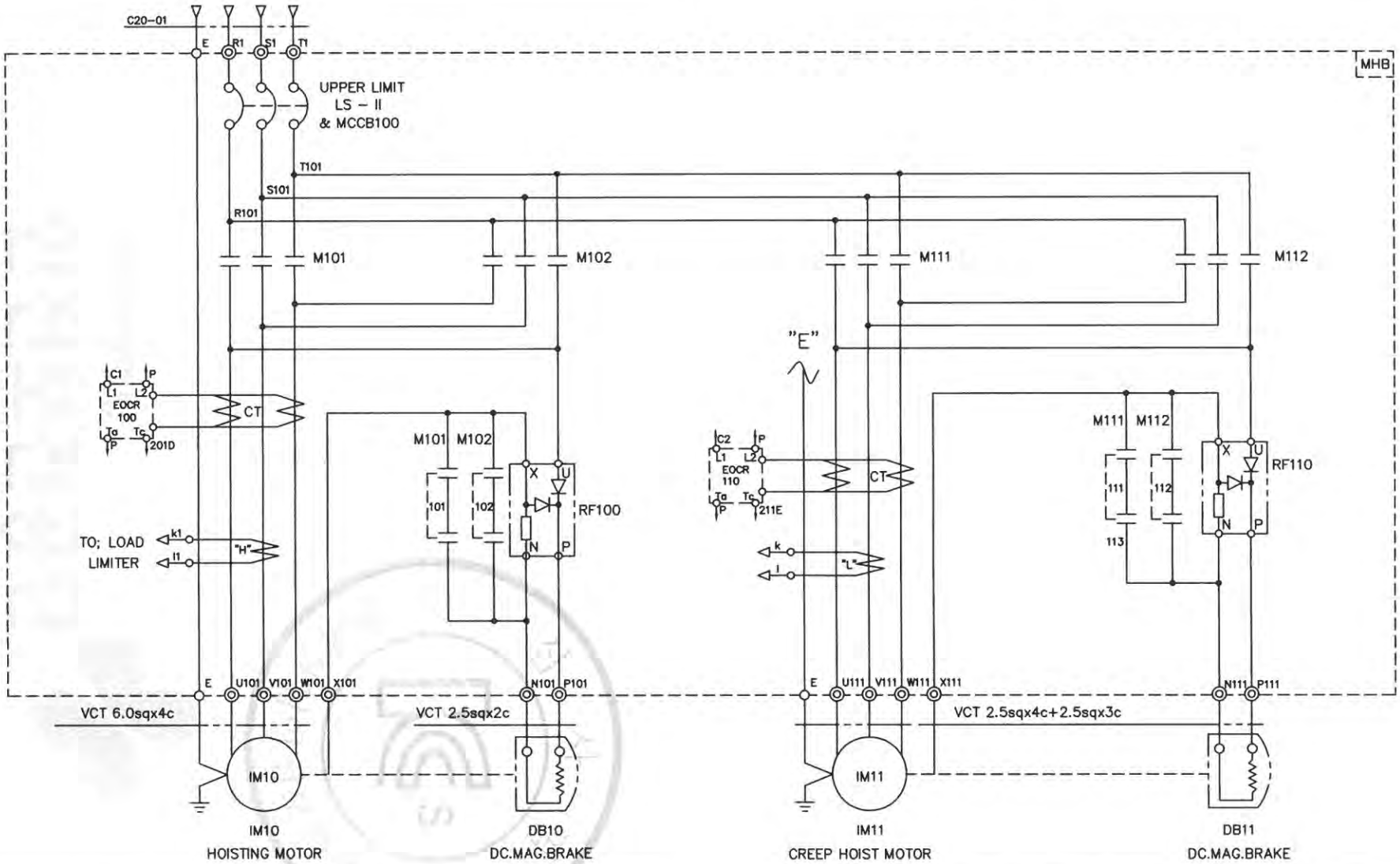

SPECIFICATION / SYMBOLS / DESCRIPTION	HOISTING POWER	HOISTING MOTOR	CREEP MOTOR	DC.MAG' BRAKE	NO FUSE BREAKER	TRANSFORMER	FUSE		MAGNET CONTACTOR		UPPER LIMIT	ELECTRIC OVER CURRENT RELAY		SILICON RECTIFIER		LOAD LIMITER	CABLE
	HOIST	IM 10	IM 11	DB10, 11	LS-II & MCCB100	TR 1	F11,F12	F13	M101,M102	M111,M112	LS-I, LS-II	EOCR100	EOCR110	RF100	RF110	LOAD LIMITER	C20-01
	10TON AC3PH 380V 60Hz	9KWx8P	1.1KWx8P	DC 100V	ABS-53c/50AT	380/110V,120V,200VA	2A	5A	DMC85	DMC22b	AC 600V 3A	SS-60	SS-30	SR-60	SR-30	JDL-100	VCT 6.0sqx4c
SELECTION MAKER	KUKDONG				LS	SHINHAN	-		DONG-A		KUK DONG	ASECO				JUNGHO	DONGIL

MK	DATE	REVISIONS	CHK.	APP.
4				
3				
2				
1				

CUSTOMER		DRAWING	DESIGN	CHECKED	APPROVED	SCALE	DATE	ORDER NO.
DRAWING TITLE	AUX (10T) CREEP HOISTING POWER & CONTROL					NONE		
	CIRCUIT DIAGRAM	극동호이스트 주식회사 KUK DONG HOIST CO., LTD				DWG. NO	KDC10E32	

192.168.11.51 / 2020-03-16 10:52:57

불법복제 및 배포금지

POWER CIRCUIT	ADR'S NO.
TRAVERSING MOTION	C1

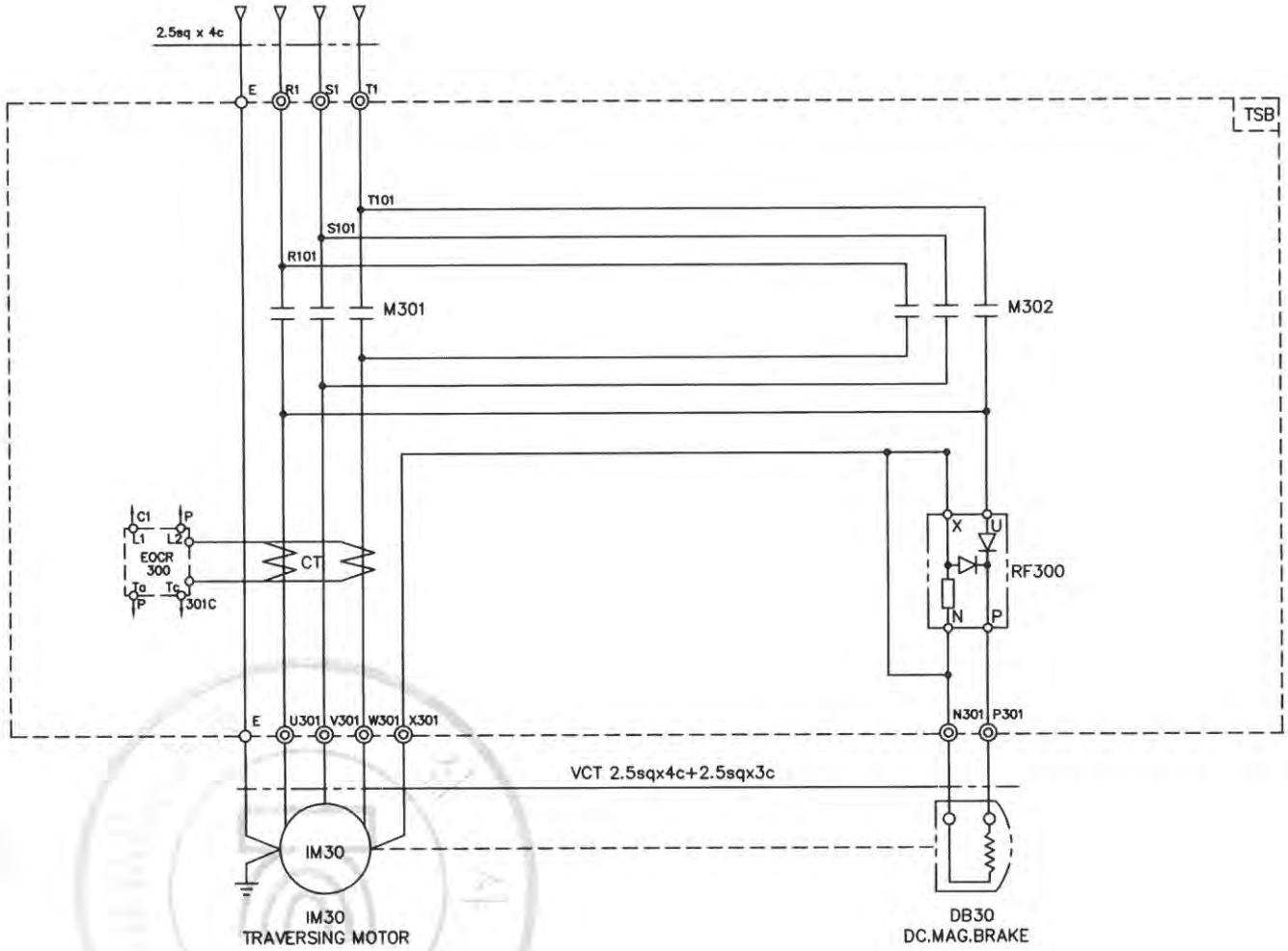

SPECIFICATION / SYMBOLS / DESCRIPTION	TRAVERSING MOTOR	DC MAG' BRAKE	MAGNET CONTACTOR	SILICON RECTIFIER	ELECTRIC OVER CURRENT RELAY	LIMIT SWTCH
	IM 30	DB 30	M301 , M302	RF 300	EOCR 300	LS-301 , LS-302
	1.5KW x 4P AC 3PH 380V 60Hz	DC 100V	DMC22b	SR-30	SS-05	KG-L001
	1.0KW x 6P AC 3PH 380V 60Hz	DC 100V	DMC22b	SR-30	SS-05	KG-L001
SELECTION MAKER	KUKDONG		DONG-A	ASECO		KG-AUTO

MK	DATE	REVISIONS	CHK.	APP.
4				
3				
2				
1				

CUSTOMER		DRAWING	DESIGN	CHECKED	APPROVED	SCALE	DATE	ORDER NO.
DRAWING TITLE	TRAVERSING POWER CONTROL CIRCUIT DIAGRAM					NONE		
		극동호이스트 주식회사 KUK DONG HOIST CO., LTD				DWG. NO	KDC20E33	

192.168.11.51 / 2020-03-16 10:52:57

불법복제 및 배포금지

POWER CIRCUIT	ADR'S NO.
TRAVERSING MOTION	C2

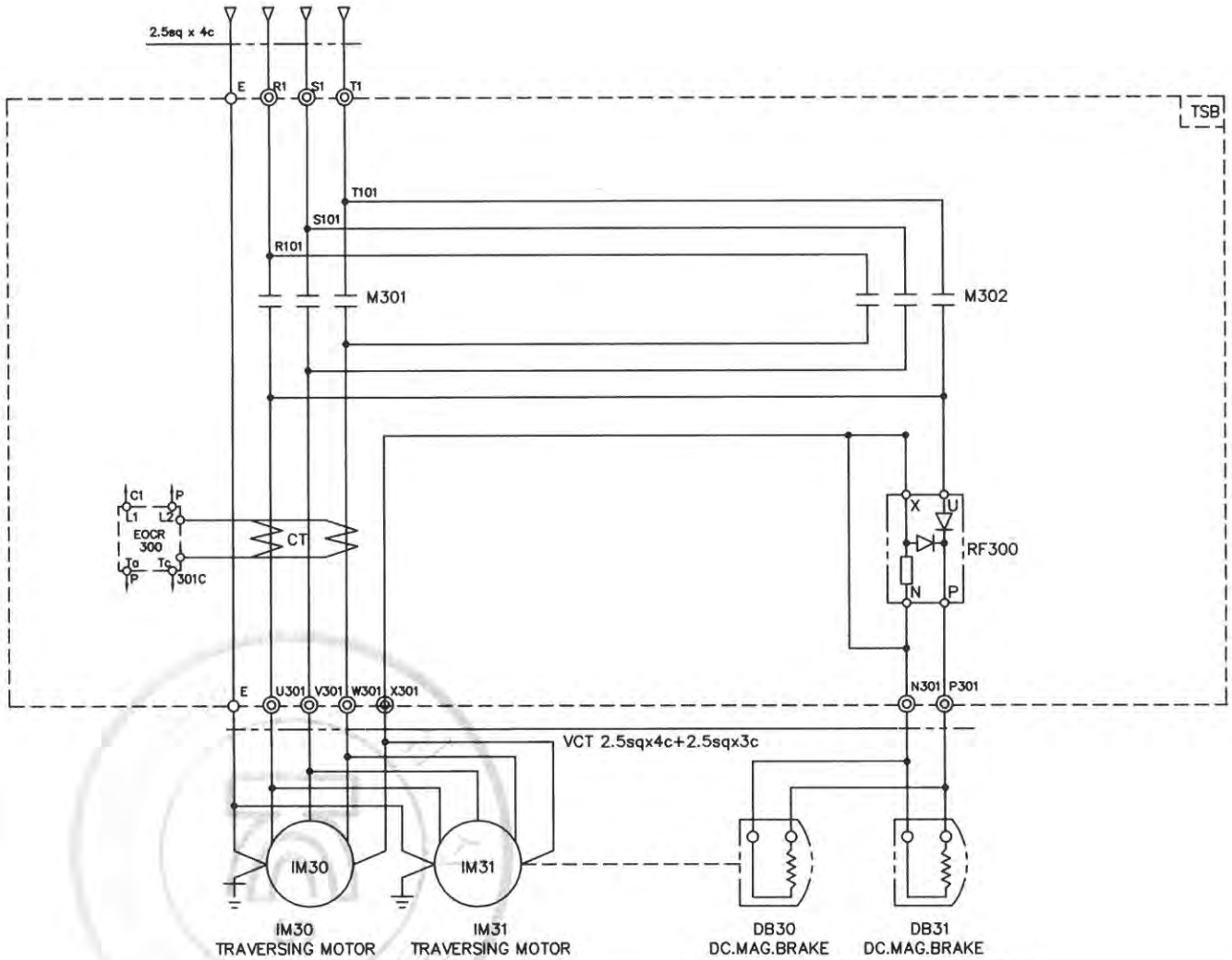

SPECIFICATION / SYMBOLS / DESCRIPTION	TRAVERSING MOTOR	DC MAG' BRAKE	MAGNET CONTACTOR	SILICON RECTIFIER	ELECTRIC OVER CURRENT RELAY	LIMIT SWTCH
	IM 30 , 1M31	DB 30	M301 , M302	RF 300	EOCR 300	LS-301 , LS-302
	1.5KW x 4P AC 3PH 380V 60Hz	DC 100V	DMC22b	SR-30	SS-30	KG-L001
	1.0KW x 6P AC 3PH 380V 60Hz	DC 100V	DMC22b	SR-30	SS-30	KG-L001
SELECTION / MAKER	KUK DONG		DONG-A	ASECO		KG-AUTO

MK	DATE	REVISIONS	CHK.	APP.
4				
3				
2				
1				

CUSTOMER		DRAWING	DESIGN	CHECKED	APPROVED	SCALE	DATE	ORDER NO.
DRAWING TITLE	TRAVERSING POWER CONTROL CIRCUIT DIAGRAM					NONE		
		극동호이스트 주식회사 KUK DONG HOIST CO., LTD				DWG. NO	KDC20E34	

불법복제 및 배포금지

192.168.11.51 / 2020-03-16 10:52:57

1	2	3	4	5	6	7	8	9	10	11	12	13	14	15	16	17	18	19	20.

ADR'S NO.

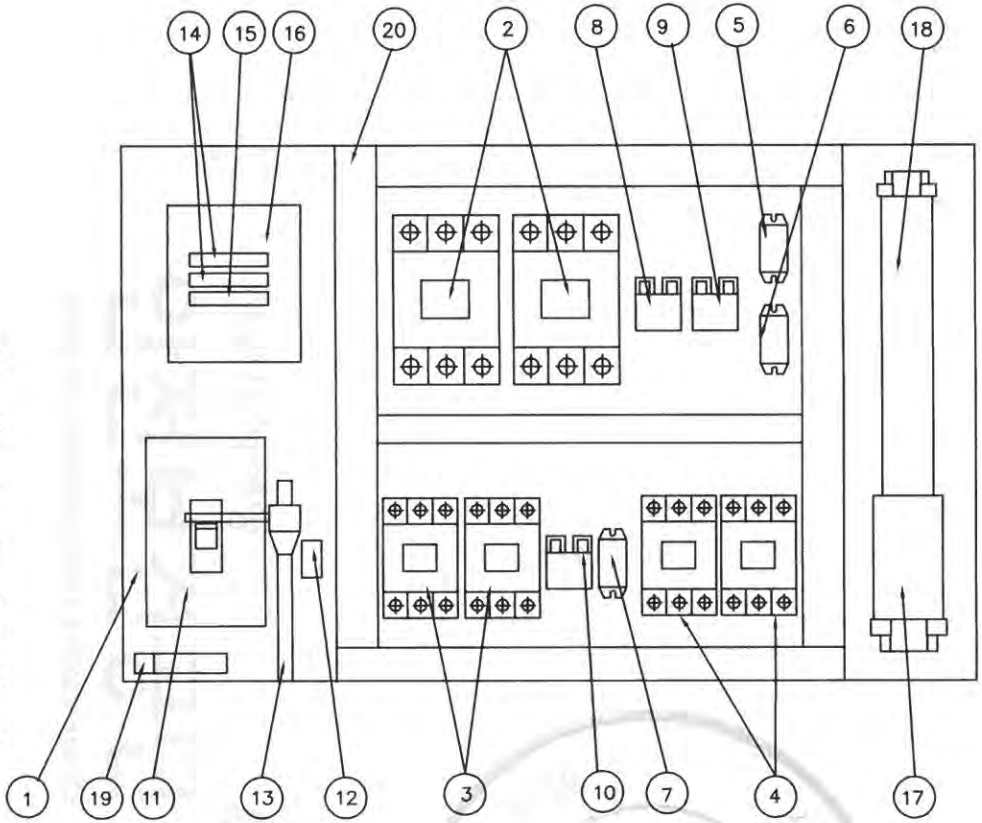

NO	DESCRIPTION	SPECIFICATION	Q'TY	REMARK
1	CHASSIS PLATE		1	아 연 도 금
2	MAGNET CONTACT	MC-130a	2	HOISTING
3	MAGNET CONTACT	DMC22b	2	CREEP HOISTING
4	MAGNET CONTACT	DMC22b	2	TRAVERSING
5	SILICON RECTIFIER	SR-60	1	HOISTING
6	SILICON RECTIFIER	SR-30	1	CREEP HOISTING
7	SILICON RECTIFIER	SR-30	1	TRAVERSING
8	E.O.C.R	SS-60	1	HOISTING
9	E.O.C.R	SS-30	1	CREEP HOISTING
10	E.O.C.R	SS-05	1	TRAVERSING
11	N.F.B	60AF/60AT	1	LS-2
12	UPPER LIMIT	AC 600V/3A	1	LS-1
13	LIMIT LEVER	SS400	1	
14	FUSE (F11,F12)	2 A	2	
15	FUSE (F13)	5 A	1	
16	TRANSFORMER	440V/110,120V, 200VA	1	
17	TERMINAL BLOCK	100A,25A		
18	TERMINAL BLOCK	15A		
19	EARTH TERMINAL	5tx25x50	1	
20	CABLE DUCT	-	1	

불법복제 및 배포금지

192.168.11.51 / 2020-03-16 10:52:57

N O T E

1. UPPER LIMIT LS-1의 접점 허용 전류 용량. : AC 600V, 3A
2. UPPER LIMIT LS-2의 접점 허용 전류 용량. : NFB 60AF/60AT
3. EARTH TERMINAL RESISTANCE : 0.018 Ω
4. POWER SOURCE : AC. 3ø 440V 60HZ

NOTE

1. 전선의 색상은 다음과 같다.
   1) 흑색 : 교류 및 직류 전원선로
   2) 적색 : 교류제어회로
   3) 주황색 : 외부 전원에서 공급되는 연동장치 제어회로
   4) 녹색 또는 녹색과 황색 혼용 : 접지선
   5) 청색 : 직류 제어선로
2. CABLE MATERIAL : KIV OR EQUIVALENT, MIN SIZE : 1.5sq
3. 제어용 전선 : 1.5mm KIV,HIV
4. 제작시 다소 변경 될수있음.
5. 외함 개방구조는 다음과 같을것.
   1) 외함 개방시 충전부분이 차단되도록 할것.
   2) 외함 개방후 충전되어있는 부분은 IP2X 이상의 직접 접촉 방호가 되어있을것.

MK	DATE	REVISIONS	CHK.	APP.
4				
3				
2				
1				

CUSTOMER	
DRAWING TITLE	MAIN (20T) HOIST CONTROL BOX ARRANGEMENT DRAWING

DRAWING	DESIGN	CHECKED	APPROVED	SCALE	DATE	ORDER NO.
				NONE		

극동호이스트 주식회사
KUK DONG HOIST CO. LTD

DWG. NO KDC20BA42

ADR'S NO.

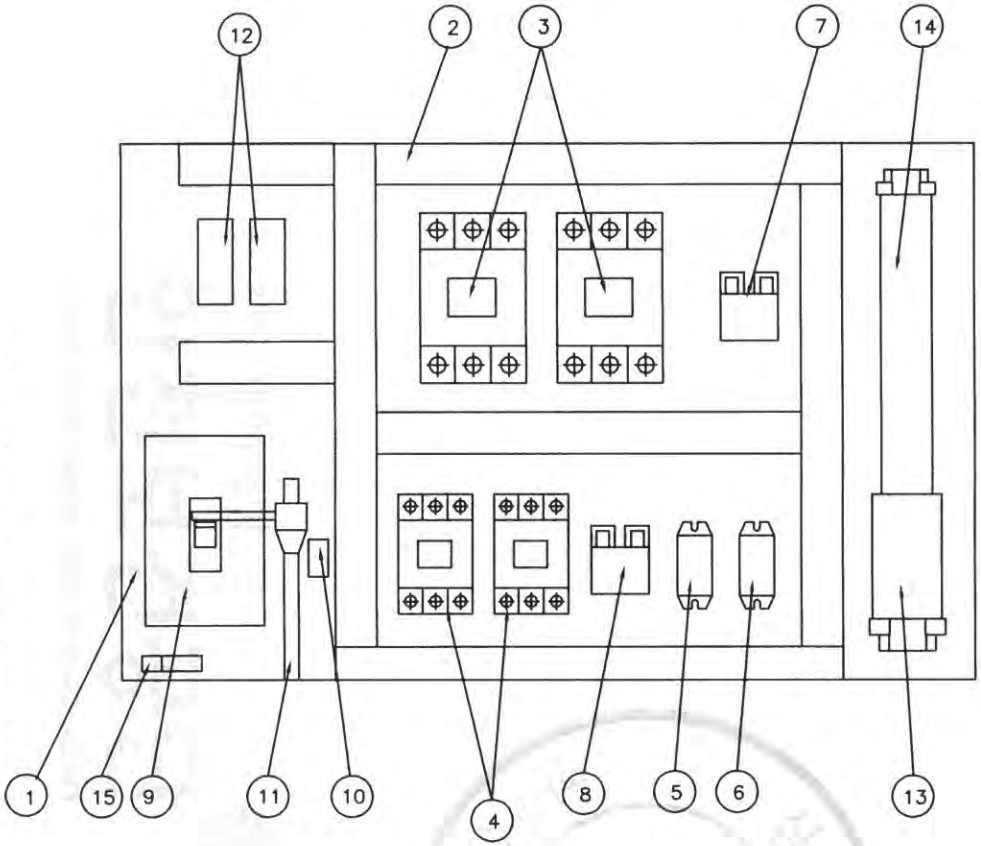

NO	DESCRIPTION	SPECIFICATION	Q'TY	REMARK
1	CHASSIS PLATE		1	아 연 도 금
2	CABLE DUCT	–	1	
3	MAGNET CONTACTOR	DMC65	2	HOISTING
4	MAGNET CONTACTOR	DMC22b	2	CREEP
5	SILICON RECTIFIER	SR–60	1	HOISTING
6	SILICON RECTIFIER	SR–30	1	CREEP
7	E.O.C.R	SS–60	1	HOISTING
8	E.O.C.R	SS–30	1	CREEP
9	N.F.B	50AF/50AT	1	LS–2
10	UPPER LIMIT	AC 600V/3A	2	LS–1
11	LIMIT LEVER	SS400	1	
12	RELAY & SOCKET	4a4b	1	
13	TERMINAL BLOCK	60A,25A		
14	TERMINAL BLOCK	15A		
15	EARTH TERMINAL	5tx24x50		

NOTE

1. UPPER LIMIT LS–1의 접점 허용 전류 용량. : AC 600V, 3A
2. UPPER LIMIT LS–2의 접점 허용 전류 용량. : NFB 50AF/50AT
3. EARTH TERMINAL RESISTANCE : 0.018 Ω
4. POWER SOURCE : AC. 3ø 440V 60HZ

NOTE

1. 전선의 색상은 다음과 같다.
   1) 흑색 : 고류 및 직류 전원선로
   2) 적색 : 고류제어회로
   3) 주황색 : 외부 전원에서 공급되는 연동장치 제어회로
   4) 녹색 또는 녹색과 황색 혼용 : 접지선
   5) 청색 : 직류 제어선로
2. CABLE MATERIAL : KIV OR EQUIVALENT
   MIN SIZE : 1.5sq
3. 제어용 전선 : 1.5mm KIV,HIV
4. 제작시 다소 변경 될수있음.
5. 외함 개방구조는 다음과 같을것.
   1) 외함 개방시 충전부분이 차단되도록 할것.
   2) 외함 개방후 충전되어있는 부분은 IP2X 이상의 직접 접촉 방호가 되어있을것.

MK	DATE	REVISIONS	CHK.	APP.
4				
3				
2				
1				

CUSTOMER		DRAWING	DESIGN	CHECKED	APPROVED	SCALE	DATE	ORDER NO.
DRAWING TITLE	AUX (10T) HOIST CONTROL BOX ARRANGEMENT DRAWING					NONE		
		극동호이스트 주식회사 KUK DONG HOIST CO., LTD.				DWG. NO	KD10BA04A	

192.168.11.51 / 2020-03-16 10:52:57

불법복제 및 배포금지

1	2	3	4	5	6	7	8	9	10	11	12	13	14	15	16	17	18	19	20

POWER CIRCUIT

ADR'S NO. B1

HOISTING MOTION | CREEP HOIST MOTION

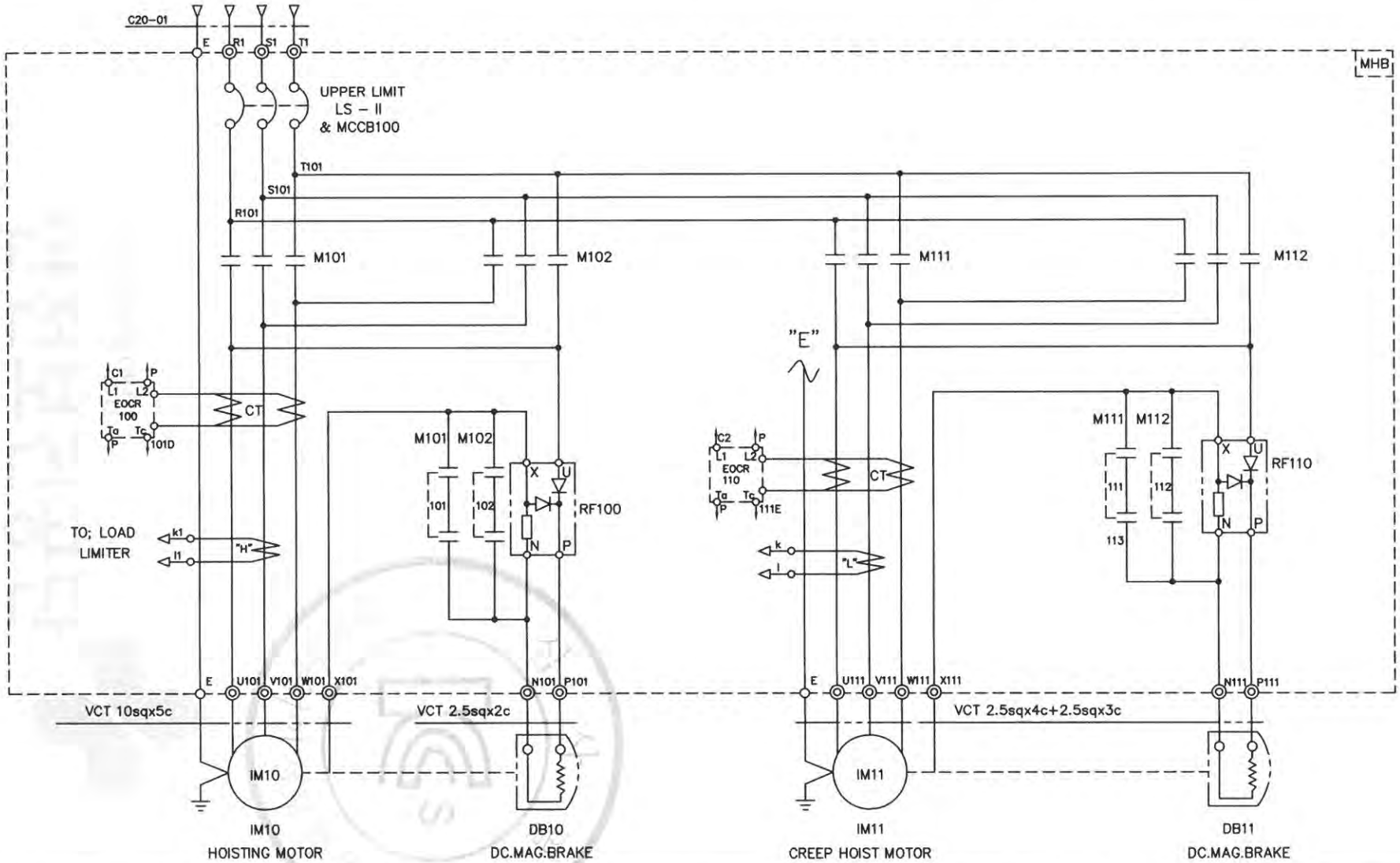

SPECIFICATION / SYMBOLS	HOISTING POWER	HOISTING MOTOR	CREEP MOTOR	DC.MAG' BRAKE	NO FUSE BREAKER	TRANSFORMER	FUSE		MAGNET CONTACTOR		UPPER LIMIT	ELECTRIC OVER CURRENT RELAY		SILICON RECTIFIER		LOAD LIMITER	CABLE
DESCRIPTION	HOIST	IM 10	IM 11	DB10, 11	LS-II & MCCB100	TR 1	F11,F12	F13	M101,M102	M111,M112	LS-I, LS-II	EOCR100	EOCR110	RF100	RF110	LOAD LIMITER	C20-01
	20TON AC3PH 440V 60Hz	17KWx8P	1.8KWx8P	DC 100V	ABS-63c/60AT	440/110V,120V,200VA	2A	5A	MC-130a	DMC22b	AC 600V 3A	SS-60	SS-30	SR-60	SR-30	JDL-100	VCT 10sqx4c
SELECTION / MAKER	KUKDONG				LS	SHINHAN	-		LS	DONG-A	KUK DONG	ASECO				JUNGHO	DONGIL

MK	DATE	REVISIONS	CHK.	APP.
4				
3				
2				
1				

CUSTOMER

DRAWING TITLE: MAIN (20T) CREEP HOISTING POWER & CONTROL

CIRCUIT DIAGRAM

DRAWING	DESIGN	CHECKED	APPROVED	SCALE	DATE	ORDER NO.
				NONE		

극동호이스트 주식회사
KUK DONG HOIST CO., LTD

DWG. NO KDC20E42

192.168.11.51 / 2020-03-16 10:52:57

불법복제 및 배포금지

1	2	3	4	5	6	7	8	9	10	11	12	13	14	15	16	17	18	19	20

POWER CIRCUIT

ADR'S NO.

HOISTING MOTION | CREEP HOIST MOTION

B1

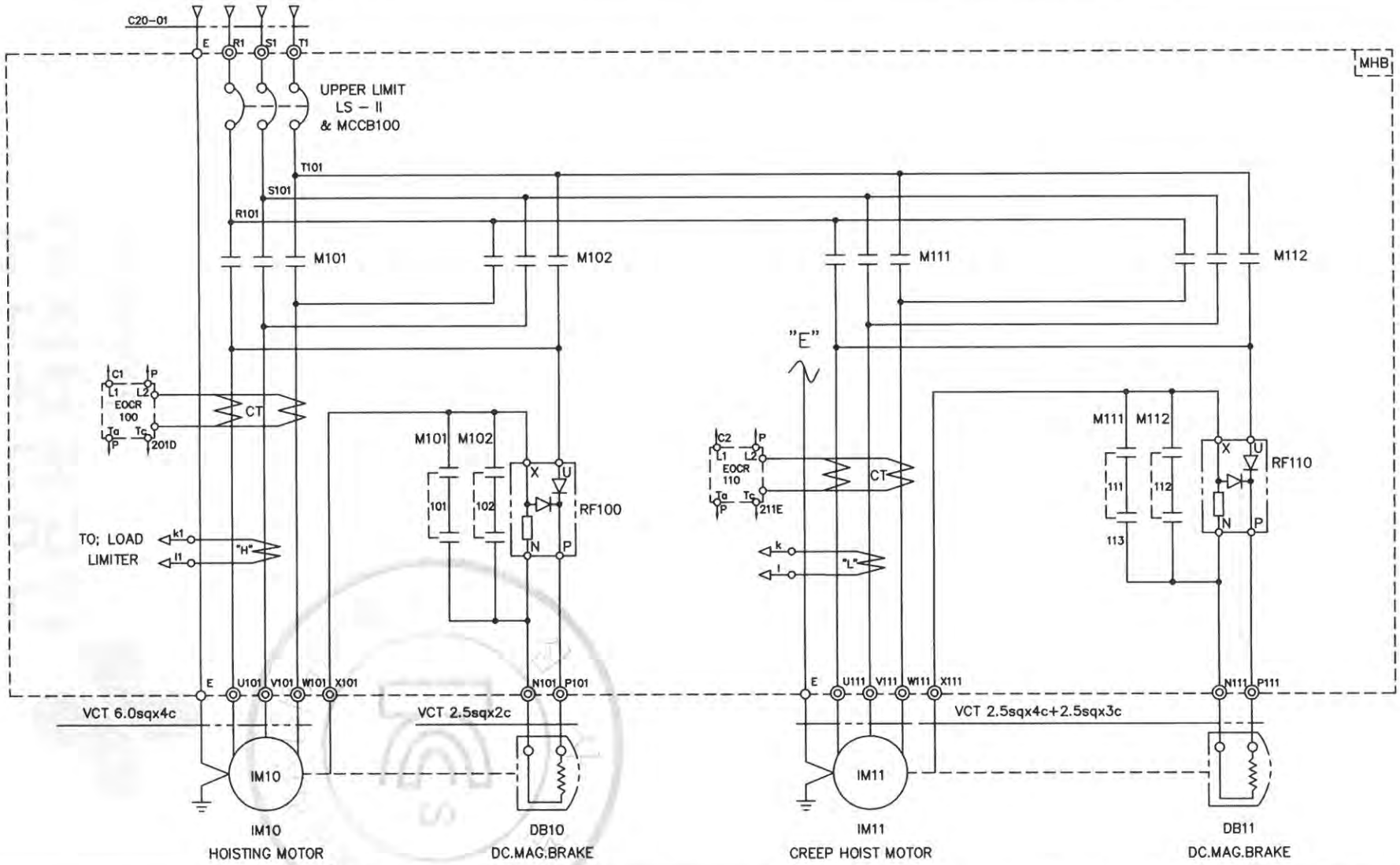

SPECIFICATION / SYMBOLS / DESCRIPTION	HOISTING POWER	HOISTING MOTOR	CREEP MOTOR	DC.MAG' BRAKE	NO FUSE BREAKER	TRANSFORMER	FUSE		MAGNET CONTACTOR		UPPER LIMIT	ELECTRIC OVER CURRENT RELAY		SILICON RECTIFIER		LOAD LIMITER	CABLE
	HOIST	IM 10	IM 11	DB10, 11	LS-II & MCCB100	TR 1	F11,F12	F13	M101,M102	M111,M112	LS-I, LS-II	EOCR100	EOCR110	RF100	RF110	LOAD LIMITER	C20-01
	10TON AC3PH 440V 60Hz	9KWx8P	1.1KWx8P	DC 100V	ABS-53c/50AT	440/110V,120V,200VA	2A	5A	DMC65	DMC22b	AC 600V 3A	SS-60	SS-30	SR-60	SR-30	JDL-100	VCT 6.0sqx4c
SELECTION MAKER	KUKDONG				LS	SHINHAN	-		DONG-A		KUK DONG	ASECO				JUNGHO	DONGIL

MK	DATE	REVISIONS	CHK.	APP.
4				
3				
2				
1				

CUSTOMER

DRAWING TITLE: AUX (10T) CREEP HOISTING POWER & CONTROL

CIRCUIT DIAGRAM

DRAWING	DESIGN	CHECKED	APPROVED	SCALE	DATE	ORDER NO.
				NONE		

극동호이스트 주식회사
KUK DONG HOIST CO., LTD

DWG. NO: KDC10E42

192.168.11.51 / 2020-03-16 10:52:57

무단배포금지

1	2	3	4	5	6	7	8	9	10	11	12	13	14	15	16	17	18	19	20
POWER CIRCUIT																			ADR'S NO.
TRAVERSING MOTION																			C1

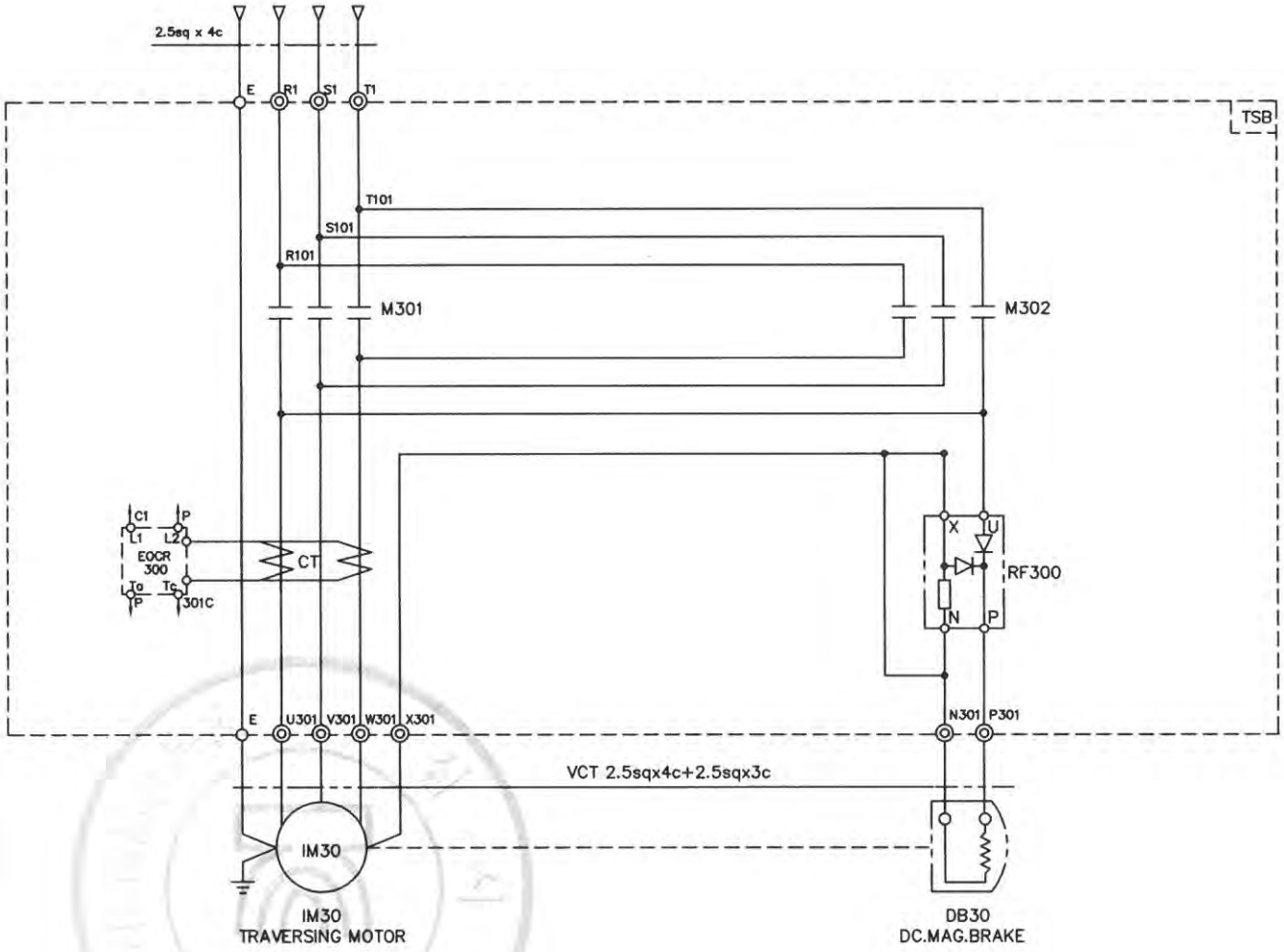

SPECIFICATION / SYMBOLS / DESCRIPTION	TRAVERSING MOTOR	DC MAG' BRAKE	MAGNET CONTACTOR	SILICON RECTIFIER	ELECTRIC OVER CURRENT RELAY	LIMIT SWTCH
	IM 30	DB 30	M301 , M302	RF 300	EOCR 300	LS-301 , LS-302
	1.5KW x 4P AC 3PH 440V 60Hz	DC 100V	DMC22b	SR-30	SS-05	KG-L001
	1.0KW x 6P AC 3PH 440V 60Hz	DC 100V	DMC22b	SR-30	SS-05	KG-L001
SELECTION / MAKER	KUKDONG		DONG-A	ASECO		KG-AUTO

MK	DATE	REVISIONS	CHK.	APP.
4				
3				
2				
1				

CUSTOMER		DRAWING	DESIGN	CHECKED	APPROVED	SCALE	DATE	ORDER NO.
DRAWING TITLE	TRAVERSING POWER CONTROL CIRCUIT DIAGRAM					NONE		
		극동호이스트 주식회사 KUK DONG HOIST CO., LTD				DWG. NO	KDC20E43	

192.168.11.51 / 2020-03-16 10:52:57

불법복제 및 배포금지

1	2	3	4	5	6	7	8	9	10	11	12	13	14	15	16	17	18	19	20
POWER CIRCUIT																			ADR'S NO.
TRAVERSING MOTION																			C2

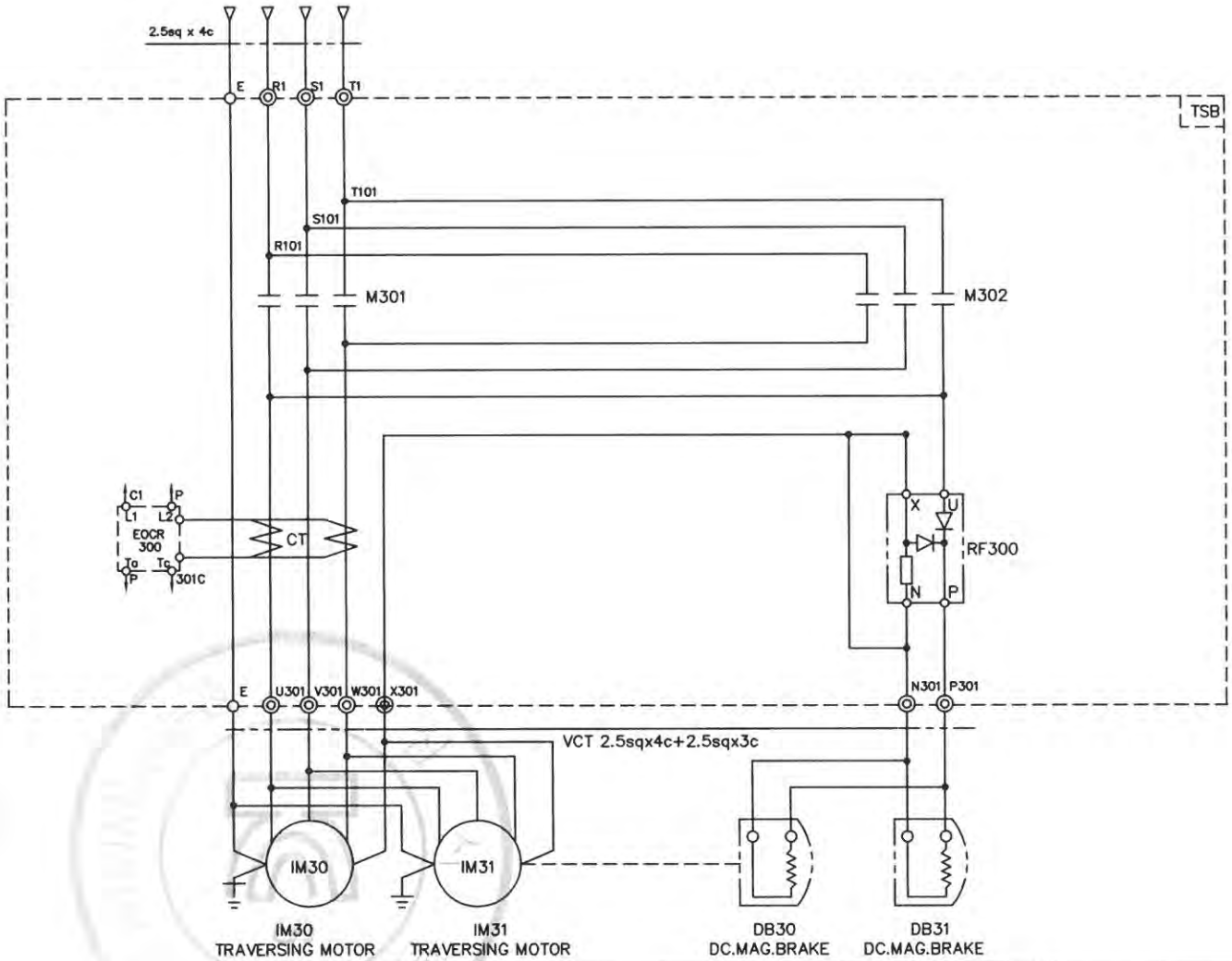

SPECIFICATION / SYMBOLS / DESCRIPTION	TRAVERSING MOTOR	DC MAG' BRAKE	MAGNET CONTACTOR	SILICON RECTIFIER	ELECTRIC OVER CURRENT RELAY	LIMIT SWTCH
	IM 30 , 1M31	DB 30	M301 , M302	RF 300	EOCR 300	LS-301 , LS-302
	1.5KW x 4P AC 3PH 440V 60Hz	DC 100V	DMC22b	SR-30	SS-30	
	1.0KW x 6P AC 3PH 440V 60Hz	DC 100V	DMC22b	SR-30	SS-30	
SELECTION MAKER	KUK DONG		DONG-A	ASECO		

MK	DATE	REVISIONS	CHK.	APP.
4				
3				
2				
1				

CUSTOMER		DRAWING	DESIGN	CHECKED	APPROVED	SCALE	DATE	ORDER NO.
DRAWING TITLE	TRAVERSING POWER CONTROL CIRCUIT DIAGRAM					NONE		
		극동호이스트 주식회사 KUK DONG HOIST CO., LTD				DWG. NO	KDC20E44	

192.168.11.51 / 2020-03-16 10:52:57

불법복제 및 배포금지

ADR'S NO.

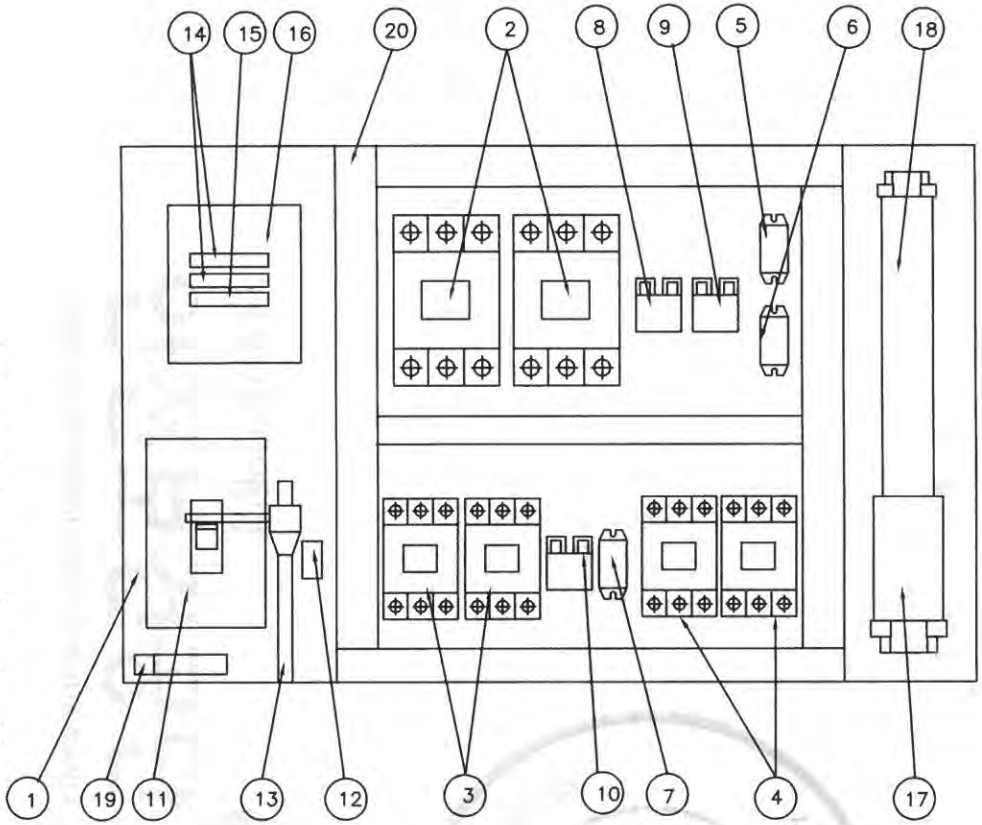

NO	DESCRIPTION	SPECIFICATION	Q'TY	REMARK
1	CHASSIS PLATE		1	아 연 도 금
2	MAGNET CONTACT	MC-130a	2	HOISTING
3	MAGNET CONTACT	DMC22b	2	CREEP HOISTING
4	MAGNET CONTACT	DMC22b	2	TRAVERSING
5	SILICON RECTIFIER	SR-60	1	HOISTING
6	SILICON RECTIFIER	SR-30	1	CREEP HOISTING
7	SILICON RECTIFIER	SR-30	1	TRAVERSING
8	E.O.C.R	SS-60	1	HOISTING
9	E.O.C.R	SS-30	1	CREEP HOISTING
10	E.O.C.R	SS-05	1	TRAVERSING
11	N.F.B	60AF/60AT	1	LS-2
12	UPPER LIMIT	AC 600V/3A	1	LS-1
13	LIMIT LEVER	SS400	1	
14	FUSE (F11,F12)	2 A	2	
15	FUSE (F13)	5 A	1	
16	TRANSFORMER	460V/110,120V, 200VA	1	
17	TERMINAL BLOCK	100A,25A		
18	TERMINAL BLOCK	15A		
19	EARTH TERMINAL	5tx25x50	1	
20	CABLE DUCT	-	1	

불법복제 및 배포금지

192.168.11.51 / 2020-03-16 10:52:57

NOTE

1. UPPER LIMIT LS-1의 접점 허용 전류 용량. : AC 600V, 3A
2. UPPER LIMIT LS-2의 접점 허용 전류 용량. : NFB 60AF/60AT
3. EARTH TERMINAL RESISTANCE : 0.018 Ω
4. POWER SOURCE : AC. 3ø 460V 60HZ

NOTE

1. 전선의 색상은 다음과 같다.
   1) 흑색 : 교류 및 직류 전원선로
   2) 적색 : 교류제어회로
   3) 주황색 : 외부 전원에서 공급되는 연동장치 제어회로
   4) 녹색 또는 녹색과 황색 혼용 : 접지선
   5) 청색 : 직류 제어선로
2. CABLE MATERIAL : KIV OR EQUIVALENT, MIN SIZE : 1.5sq
3. 제어용 전선 : 1.5mm KIV,HIV
4. 제작시 다소 변경 될수있음.
5. 외함 개방구조는 다음과 같을것.
   1) 외함 개방시 충전부분이 차단되도록 할것.
   2) 외함 개방후 충전되어있는 부분은 IP2X 이상의 직접 접촉 방호가 되어있을것.

MK	DATE	REVISIONS	CHK.	APP.
4				
3				
2				
1				

CUSTOMER	
DRAWING TITLE	MAIN (20T) HOIST CONTROL BOX ARRANGEMENT DRAWING

DRAWING	DESIGN	CHECKED	APPROVED	SCALE	DATE	ORDER NO.
				NONE		

극동호이스트 주식회사
KUK DONG HOIST CO., LTD

DWG. NO KDC15BA52

ADR'S NO.

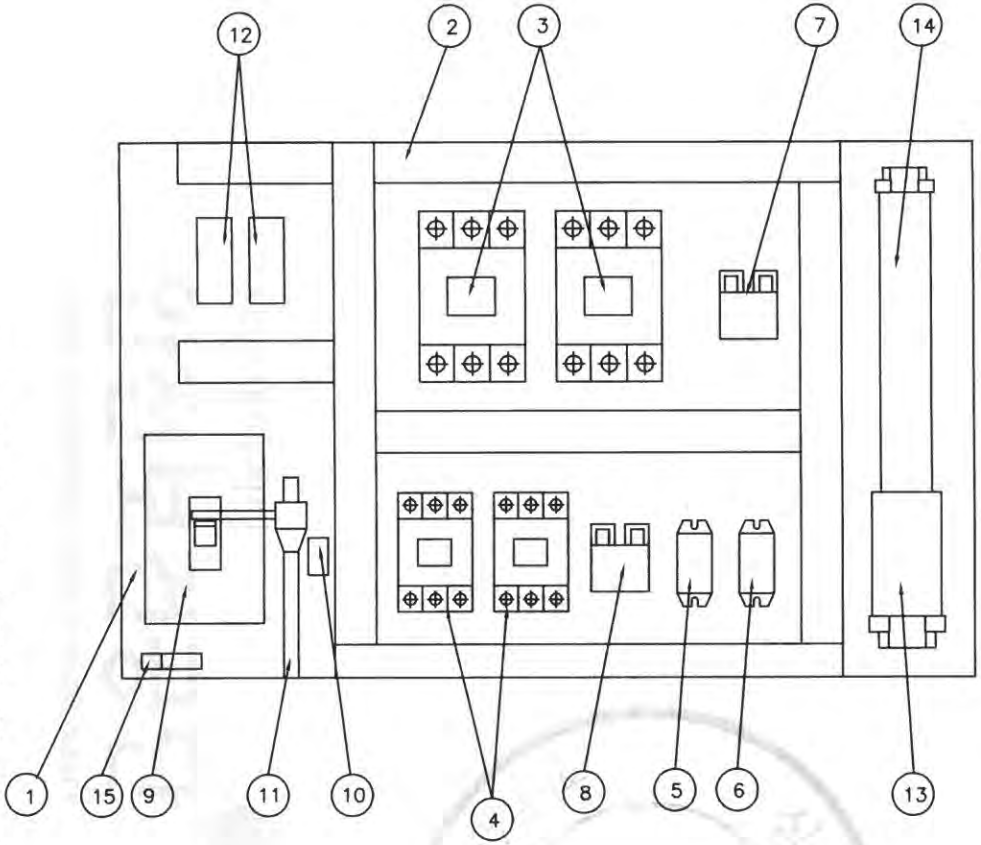

NO	DESCRIPTION	SPECIFICATION	Q'TY	REMARK
1	CHASSIS PLATE		1	아 연 도 금
2	CABLE DUCT	–	1	
3	MAGNET CONTACTOR	DMC65	2	HOISTING
4	MAGNET CONTACTOR	DMC22b	2	CREEP
5	SILICON RECTIFIER	SR–60	1	HOISTING
6	SILICON RECTIFIER	SR–30	1	CREEP
7	E.O.C.R	SS–60	1	HOISTING
8	E.O.C.R	SS–30	1	CREEP
9	N.F.B	50AF/50AT	1	LS–2
10	UPPER LIMIT	AC 600V/3A	2	LS–1
11	LIMIT LEVER	SS400	1	
12	RELAY & SOCKET	4a4b	1	
13	TERMINAL BLOCK	60A,25A		
14	TERMINAL BLOCK	15A		
15	EARTH TERMINAL	5tx24x50		

192.168.11.51 / 2020-03-16 10:52:57

불법복제 및 배포금지

NOTE

1. UPPER LIMIT LS–1의 접점 허용 전류 용량. : AC 600V, 3A
2. UPPER LIMIT LS–2의 접점 허용 전류 용량. : NFB 50AF/50AT
3. EARTH TERMINAL RESISTANCE : 0.018 Ω
4. POWER SOURCE : AC. 3ø 460V 60HZ

NOTE

1. 전선의 색상은 다음과 같다.
   1) 흑색 : 교류 및 직류 전원선로
   2) 적색 : 교류제어회로
   3) 주황색 : 외부 전원에서 공급되는 연동장치 제어회로
   4) 녹색 또는 녹색과 황색 혼용 : 접지선
   5) 청색 : 직류 제어선로
2. CABLE MATERIAL : KIV OR EQUIVALENT
   MIN SIZE : 1.5sq
3. 제어용 전선 : 1.5mm KIV,HIV
4. 제작시 다소 변경 될수있음.
5. 외함 개방구조는 다음과 같을것.
   1) 외함 개방시 충전부분이 차단되도록 할것.
   2) 외함 개방후 충전되어있는 부분은 IP2X 이상의 직접 접촉 방호가 되어있을것.

MK	DATE	REVISIONS	CHK.	APP.
4				
3				
2				
1				

CUSTOMER	
DRAWING TITLE	AUX (10T) HOIST CONTROL BOX ARRANGEMENT DRAWING

DRAWING	DESIGN	CHECKED	APPROVED	SCALE	DATE	ORDER NO.
				NONE		

극동호이스트 주식회사
KUK DONG HOIST CO., LTD.

DWG. NO KD10BA05A

1	2	3	4	5	6	7	8	9	10	11	12	13	14	15	16	17	18	19	20

POWER CIRCUIT

ADR'S NO. B1

HOISTING MOTION | CREEP HOIST MOTION

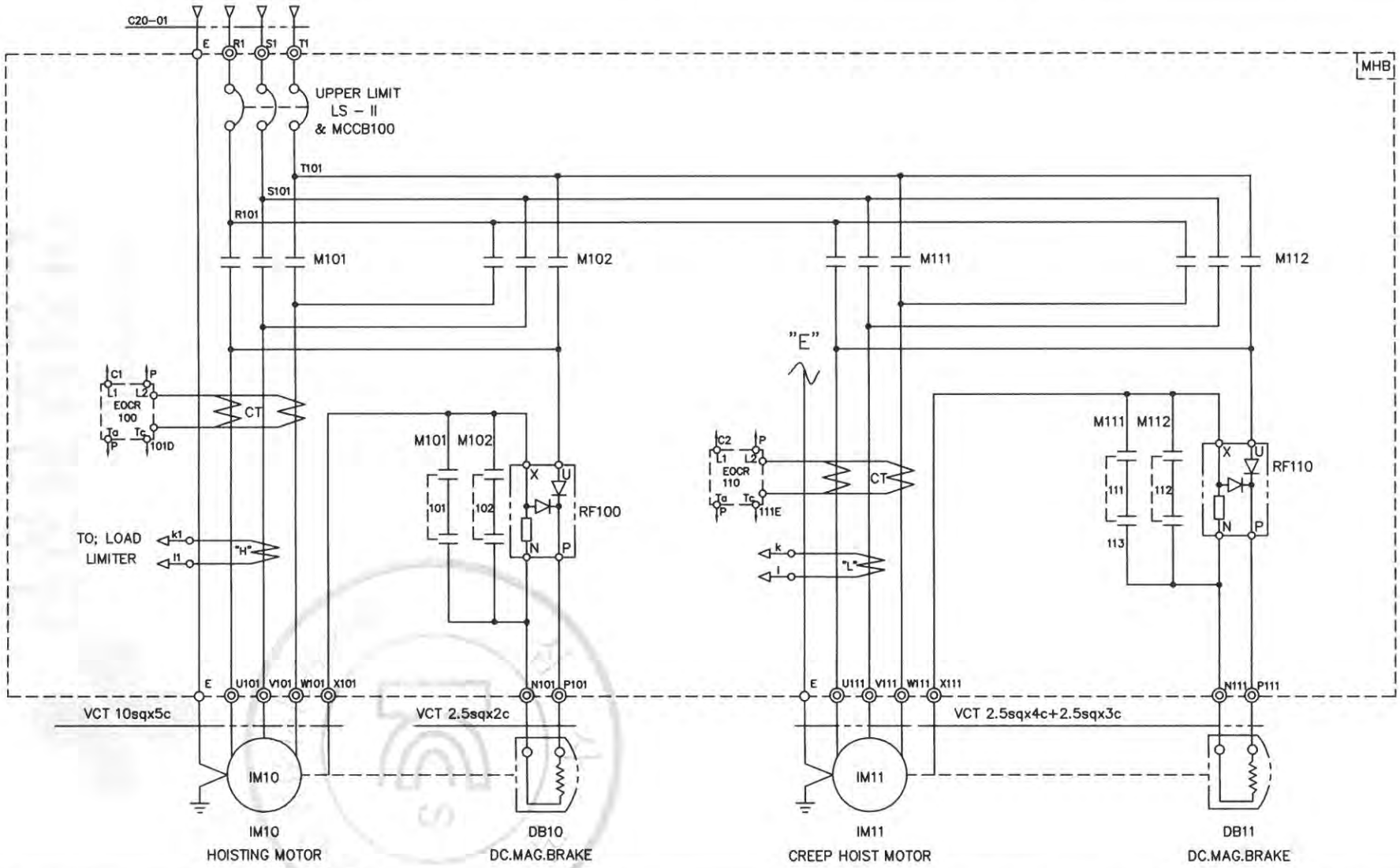

SPECIFICATION / SYMBOLS	HOISTING POWER	HOISTING MOTOR	CREEP MOTOR	DC.MAG' BRAKE	NO FUSE BREAKER	TRANSFORMER	FUSE		MAGNET CONTACTOR		UPPER LIMIT	ELECTRIC OVER CURRENT RELAY		SILICON RECTIFIER		LOAD LIMITER	CABLE
DESCRIPTION	HOIST	IM 10	IM 11	DB10, 11	LS-II & MCCB100	TR 1	F11,F12	F13	M101,M102	M111,M112	LS-I, LS-II	EOCR100	EOCR110	RF100	RF110	LOAD LIMITER	C20-01
	20TON AC3PH 460V 60Hz	17KWx8P	1.8KWx8P	DC 100V	ABS-63AF/60AT	460/110V,120V,200VA	2A	5A	MC-130a	DMC22b	AC 600V 3A	SS-60	SS-30	SR-60	SR-30	JDL-100	VCT 10sqx4c
SELECTION MAKER	KUKDONG				LS	SHINHAN	-		LS	DONG-A	KUK DONG	ASECO				JUNGHO	DONGIL

MK	DATE	REVISIONS	CHK.	APP.
4				
3				
2				
1				

CUSTOMER		DRAWING	DESIGN	CHECKED	APPROVED	SCALE	DATE	ORDER NO.
DRAWING TITLE	MAIN (20T) CREEP HOISTING POWER & CONTROL CIRCUIT DIAGRAM					NONE		
		KD 극동호이스트 주식회사 KUK DONG HOIST CO., LTD				DWG. NO	KDC20E52	

192.168.11.51 / 2020-03-16 10:52:57

불법복제 및 배포금지

1	2	3	4	5	6	7	8	9	10	11	12	13	14	15	16	17	18	19	20

POWER CIRCUIT

HOISTING MOTION | CREEP HOIST MOTION

ADR'S NO. B1

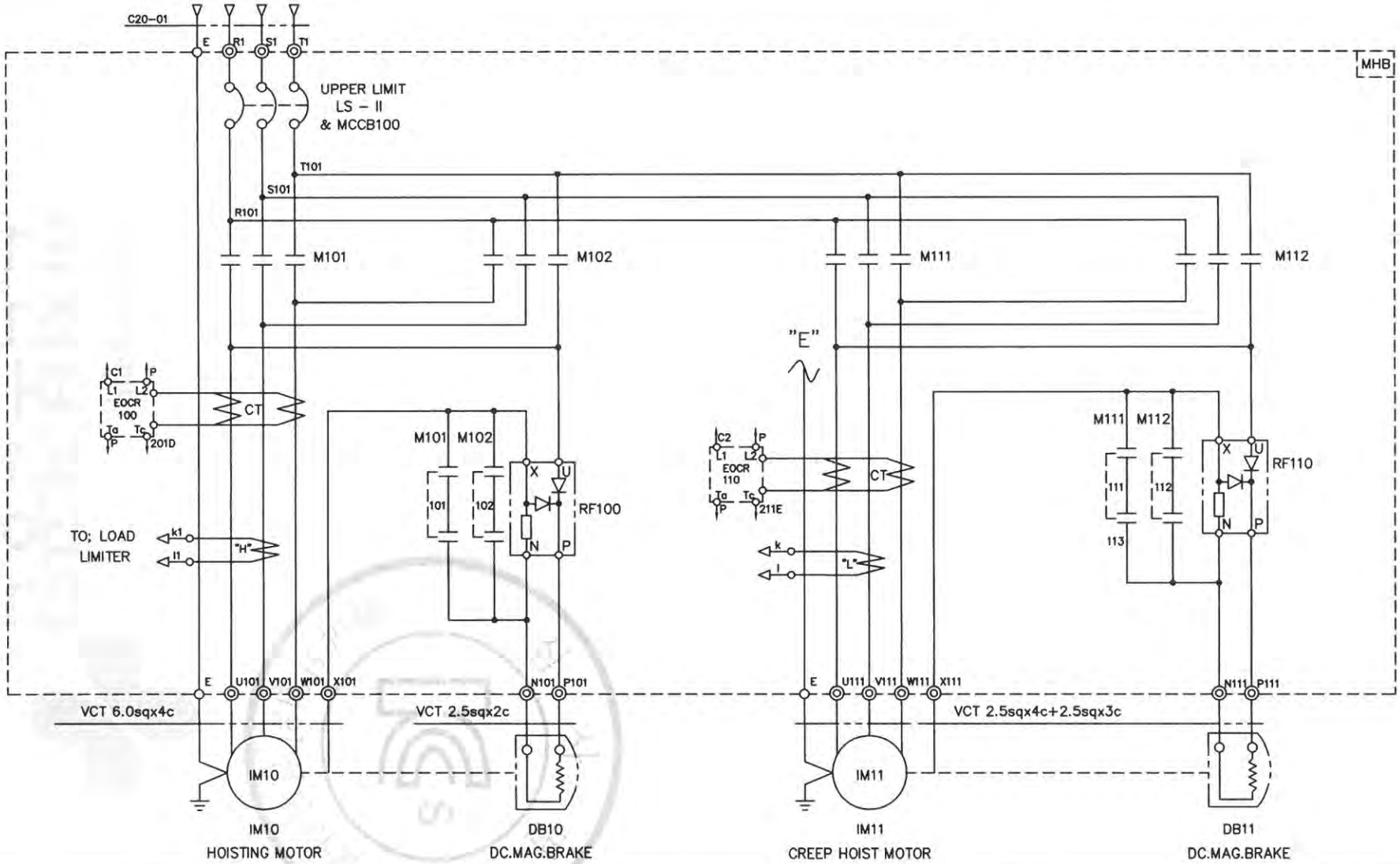

SPECIFICATION / SYMBOLS	HOISTING POWER	HOISTING MOTOR	CREEP MOTOR	DC.MAG' BRAKE	NO FUSE BREAKER	TRANSFORMER	FUSE		MAGNET CONTACTOR		UPPER LIMIT	ELECTRIC OVER CURRENT RELAY		SILICON RECTIFIER		LOAD LIMITER	CABLE
DESCRIPTION	HOIST	IM 10	IM 11	DB10, 11	LS-II & MCCB100	TR 1	F11,F12	F13	M101,M102	M111,M112	LS-I, LS-II	EOCR100	EOCR110	RF100	RF110	LOAD LIMITER	C20-01
	10TON AC3PH 460V 60Hz	9KWx8P	1.1KWx8P	DC 100V	ABS-53c/50AT	460/110V,120V,200VA	2A	5A	DMC65	DMC22b	AC 600V 3A	SS-60	SS-30	SR-60	SR-30	JDL-100	VCT 6.0sqx4c
SELECTION / MAKER	KUKDONG				LS	SHINHAN	-		DONG-A		KUK DONG	ASECO				JUNGHO	DONGIL

MK	DATE	REVISIONS	CHK.	APP.
4				
3				
2				
1				

CUSTOMER

DRAWING TITLE: AUX (10T) CREEP HOISTING POWER & CONTROL

CIRCUIT DIAGRAM

DRAWING	DESIGN	CHECKED	APPROVED	SCALE	DATE	ORDER NO.
				NONE		

극동호이스트 주식회사
KUK DONG HOIST CO., LTD

DWG. NO KDC10E52

192.168.11.51 / 2020-03-16 10:52:57

불법복제 및 배포금지

POWER CIRCUIT	ADR'S NO.
TRAVERSING MOTION	C1

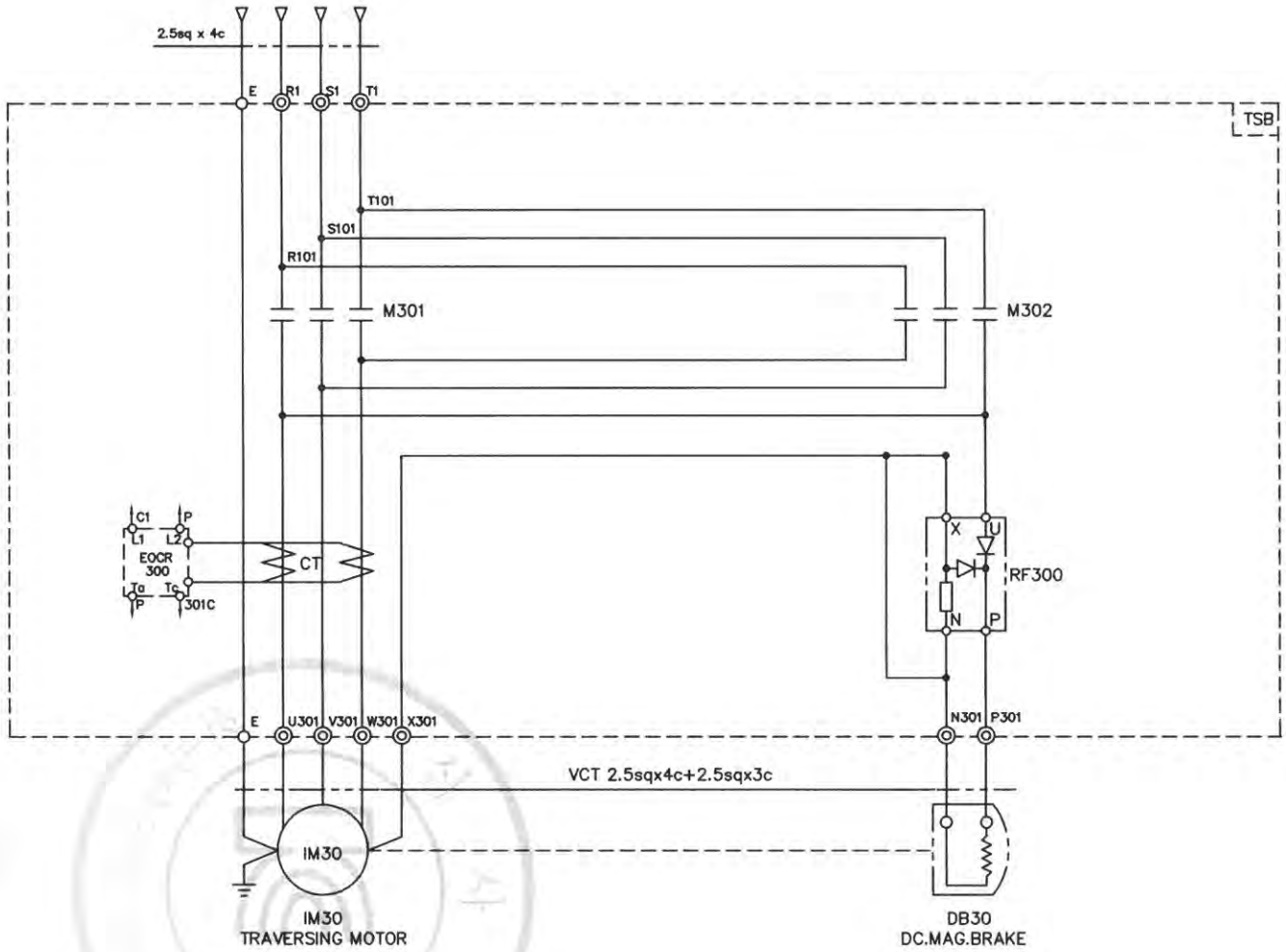

SPECIFICATION / SYMBOLS / DESCRIPTION	TRAVERSING MOTOR	DC MAG' BRAKE	MAGNET CONTACTOR	SILICON RECTIFIER	ELECTRIC OVER CURRENT RELAY	LIMIT SWTCH
	IM 30	DB 30	M301 , M302	RF 300	EOCR 300	LS-301 , LS-302
	1.5KW x 4P AC 3PH 460V 60Hz	DC 100V	DMC22b	SR-30	SS-05	KG-L001
	1.0KW x 6P AC 3PH 460V 60Hz	DC 100V	DMC22b	SR-30	SS-05	KG-L001
SELECTION / MAKER	KUKDONG		DONG-A	ASECO		KG-AUTO

MK	DATE	REVISIONS	CHK.	APP.
4				
3				
2				
1				

CUSTOMER		DRAWING	DESIGN	CHECKED	APPROVED	SCALE	DATE	ORDER NO.
DRAWING TITLE	TRAVERSING POWER CONTROL CIRCUIT DIAGRAM					NONE		
		극동호이스트 주식회사 KUK DONG HOIST CO., LTD				DWG. NO	KDC20E53	

192.168.11.51 / 2020-03-16 10:52:57

불법복제 및 배포금지

1	2	3	4	5	6	7	8	9	10	11	12	13	14	15	16	17	18	19	20
POWER CIRCUIT																			ADR'S NO.
TRAVERSING MOTION																			C2

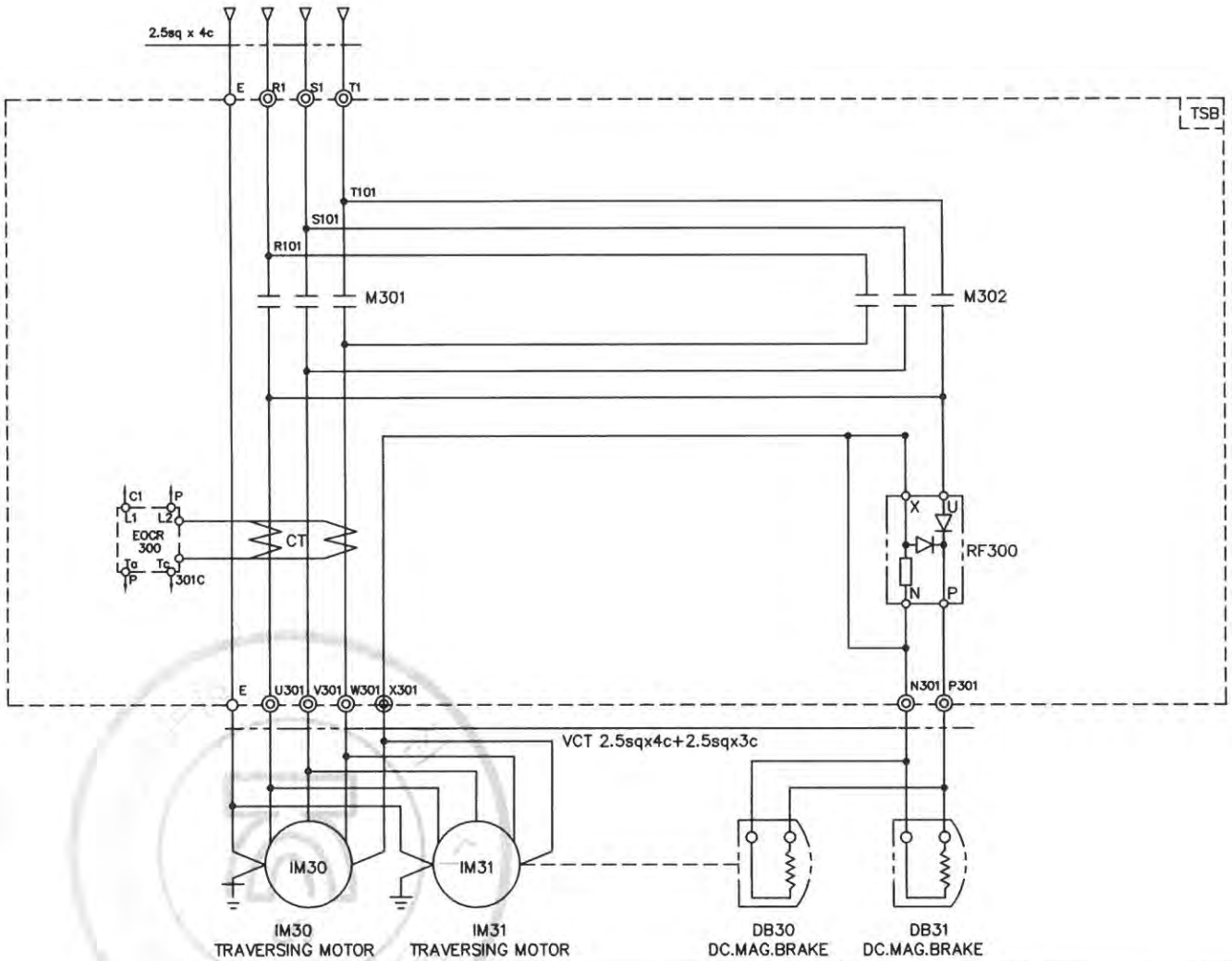

SPECIFICATION / SYMBOLS / DESCRIPTION	TRAVERSING MOTOR	DC MAG' BRAKE	MAGNET CONTACTOR	SILICON RECTIFIER	ELECTRIC OVER CURRENT RELAY	LIMIT SWTCH
	IM 30 , 1M31	DB 30	M301 , M302	RF 300	EOCR 300	LS-301 , LS-302
	1.5KW x 4P AC 3PH 460V 60Hz	DC 100V	DMC22b	SR-30	SS-30	KG-L001
	1.0KW x 6P AC 3PH 460V 60Hz	DC 100V	DMC22b	SR-30	SS-30	KG-L001
SELECTION MAKER	KUK DONG		DONG-A	ASECO		KG-AUTO

MK	DATE	REVISIONS	CHK.	APP.
4				
3				
2				
1				

CUSTOMER		DRAWING	DESIGN	CHECKED	APPROVED	SCALE	DATE	ORDER NO.
DRAWING TITLE	TRAVERSING POWER CONTROL CIRCUIT DIAGRAM					NONE		
		극동호이스트 주식회사 KUK DONG HOIST CO., LTD				DWG. NO	KDC20E54	

192.168.11.51 / 2020-03-16 10:52:57

불법복제 및 배포금지

1	2	3	4	5	6	7	8	9	10	11	12	13	14	15	16	17	18	19	20.

ADR'S NO.

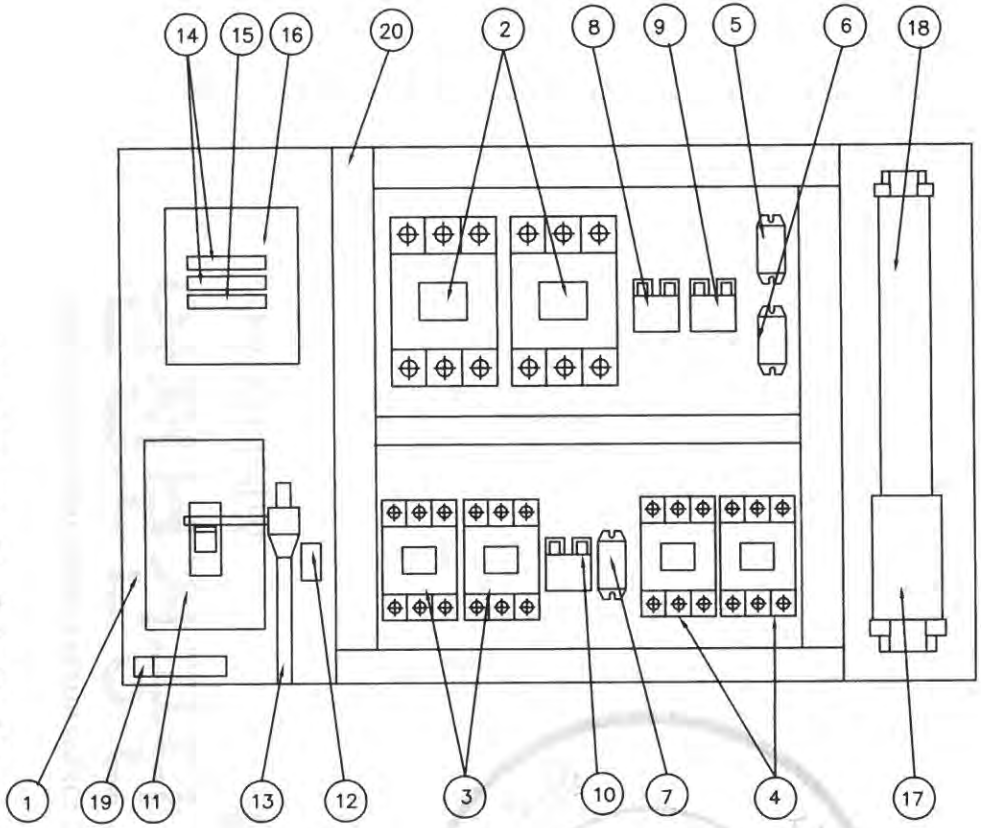

NO	DESCRIPTION	SPECIFICATION	Q'TY	REMARK
1	CHASSIS PLATE		1	아 연 도 금
2	MAGNET CONTACT	MC-130a	2	HOISTING
3	MAGNET CONTACT	DMC22b	2	CREEP HOISTING
4	MAGNET CONTACT	DMC22b	2	TRAVERSING
5	SILICON RECTIFIER	SR-60	1	HOISTING
6	SILICON RECTIFIER	SR-30	1	CREEP HOISTING
7	SILICON RECTIFIER	SR-30	1	TRAVERSING
8	E.O.C.R	SS-60	1	HOISTING
9	E.O.C.R	SS-30	1	CREEP HOISTING
10	E.O.C.R	SS-05	1	TRAVERSING
11	N.F.B	60AF/60AT	1	LS-2
12	UPPER LIMIT	AC 600V/3A	1	LS-1
13	LIMIT LEVER	SS400	1	
14	FUSE (F11,F12)	2 A	2	
15	FUSE (F13)	5 A	1	
16	TRANSFORMER	480V/110,120V, 200VA	1	
17	TERMINAL BLOCK	100A,25A		
18	TERMINAL BLOCK	15A		
19	EARTH TERMINAL	5tx25x50	1	
20	CABLE DUCT	-	1	

불법복제 및 배포금지

192.168.11.51 / 2020-03-16 10:52:57

N O T E

1. UPPER LIMIT LS-1의 접점 허용 전류 용량. : AC 600V, 3A
2. UPPER LIMIT LS-2의 접점 허용 전류 용량. : NFB 60AF/60AT
3. EARTH TERMINAL RESISTANCE : 0.018 Ω
4. POWER SOURCE : AC. 3ø 480V 60HZ

NOTE

1. 전선의 색상은 다음과 같다.
   1) 흑색 : 교류 및 직류 전원선로
   2) 적색 : 교류제어회로
   3) 주황색 : 외부 전원에서 공급되는 연동장치 제어회로
   4) 녹색 또는 녹색과 황색 혼용 : 접지선
   5) 청색 : 직류 제어선로
2. CABLE MATERIAL : KIV OR EQUIVALENT, MIN SIZE : 1.5sq
3. 제어용 전선 : 1.5mm KIV,HIV
4. 제작시 다소 변경 될수있음.
5. 외함 개방구조는 다음과 같을것.
   1) 외함 개방시 충전부분이 차단되도록 할것.
   2) 외함 개방후 충전되어있는 부분은 IP2X 이상의 직접 접촉 방호가 되어있을것.

MK	DATE	REVISIONS	CHK.	APP.
4				
3				
2				
1				

CUSTOMER	
DRAWING TITLE	MAIN (20T) HOIST CONTROL BOX
	ARRANGEMENT DRAWING

DRAWING	DESIGN	CHECKED	APPROVED	SCALE	DATE	ORDER NO.
				NONE		

극동호이스트 주식회사
KUK DONG HOIST CO. LTD

DWG. NO KDC20BA62

ADR'S NO.

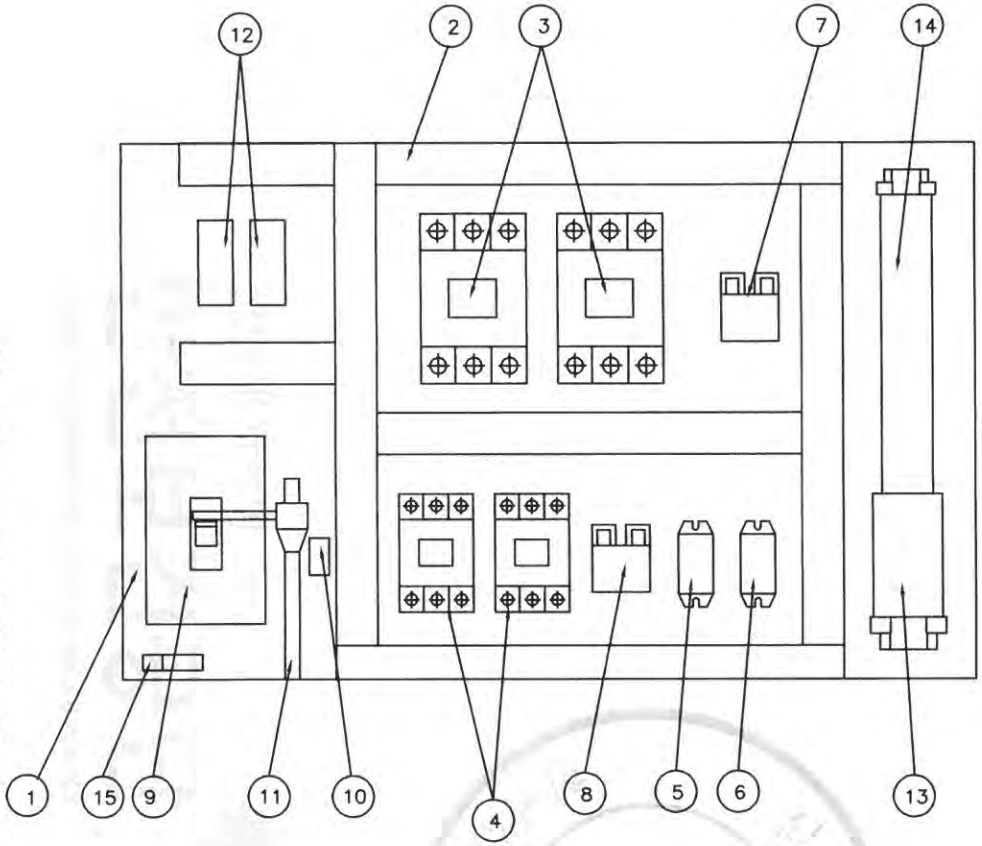

NO	DESCRIPTION	SPECIFICATION	Q'TY	REMARK
1	CHASSIS PLATE		1	아 연 도 금
2	CABLE DUCT	–	1	
3	MAGNET CONTACTOR	DMC65	2	HOISTING
4	MAGNET CONTACTOR	DMC22b	2	CREEP
5	SILICON RECTIFIER	SR–60	1	HOISTING
6	SILICON RECTIFIER	SR–30	1	CREEP
7	E.O.C.R	SS–60	1	HOISTING
8	E.O.C.R	SS–30	1	CREEP
9	N.F.B	50AF/50AT	1	LS–2
10	UPPER LIMIT	AC 600V/3A	2	LS–1
11	LIMIT LEVER	SS400	1	
12	RELAY & SOCKET	4a4b	1	
13	TERMINAL BLOCK	60A,25A		
14	TERMINAL BLOCK	15A		
15	EARTH TERMINAL	5tx24x50		

NOTE

1. UPPER LIMIT LS–1의 접점 허용 전류 용량. : AC 600V, 3A
2. UPPER LIMIT LS–2의 접점 허용 전류 용량. : NFB 50AF/50AT
3. EARTH TERMINAL RESISTANCE : 0.018 Ω
4. POWER SOURCE : AC. 3ø 480V 60HZ

NOTE

1. 전선의 색상은 다음과 같다.
   1) 흑색 : 교류 및 직류 전원선로
   2) 적색 : 교류제어회로
   3) 주황색 : 외부 전원에서 공급되는 연동장치 제어회로
   4) 녹색 또는 녹색과 황색 혼용 : 접지선
   5) 청색 : 직류 제어선로
2. CABLE MATERIAL : KIV OR EQUIVALENT
   MIN SIZE : 1.5sq
3. 제어용 전선 : 1.5mm KIV,HIV
4. 제작시 다소 변경 될수있음.
5. 외함 개방구조는 다음과 같을것.
   1) 외함 개방시 충전부분이 차단되도록 할것.
   2) 외함 개방후 충전되어있는 부분은 IP2X 이상의 직접 접촉 방호가 되어있을것.

MK	DATE	REVISIONS	CHK.	APP.
4				
3				
2				
1				

CUSTOMER		DRAWING	DESIGN	CHECKED	APPROVED	SCALE	DATE	ORDER NO.
DRAWING TITLE	AUX (10T) HOIST CONTROL BOX ARRANGEMENT DRAWING					NONE		
		극동호이스트 주식회사 KUK DONG HOIST CO., LTD.				DWG. NO	KD10BA06A	

불법복제 및 배포금지

192.168.11.51 / 2020-03-16 10:52:57

1	2	3	4	5	6	7	8	9	10	11	12	13	14	15	16	17	18	19	20
POWER CIRCUIT																			ADR'S NO.
HOISTING MOTION										CREEP HOIST MOTION									B1

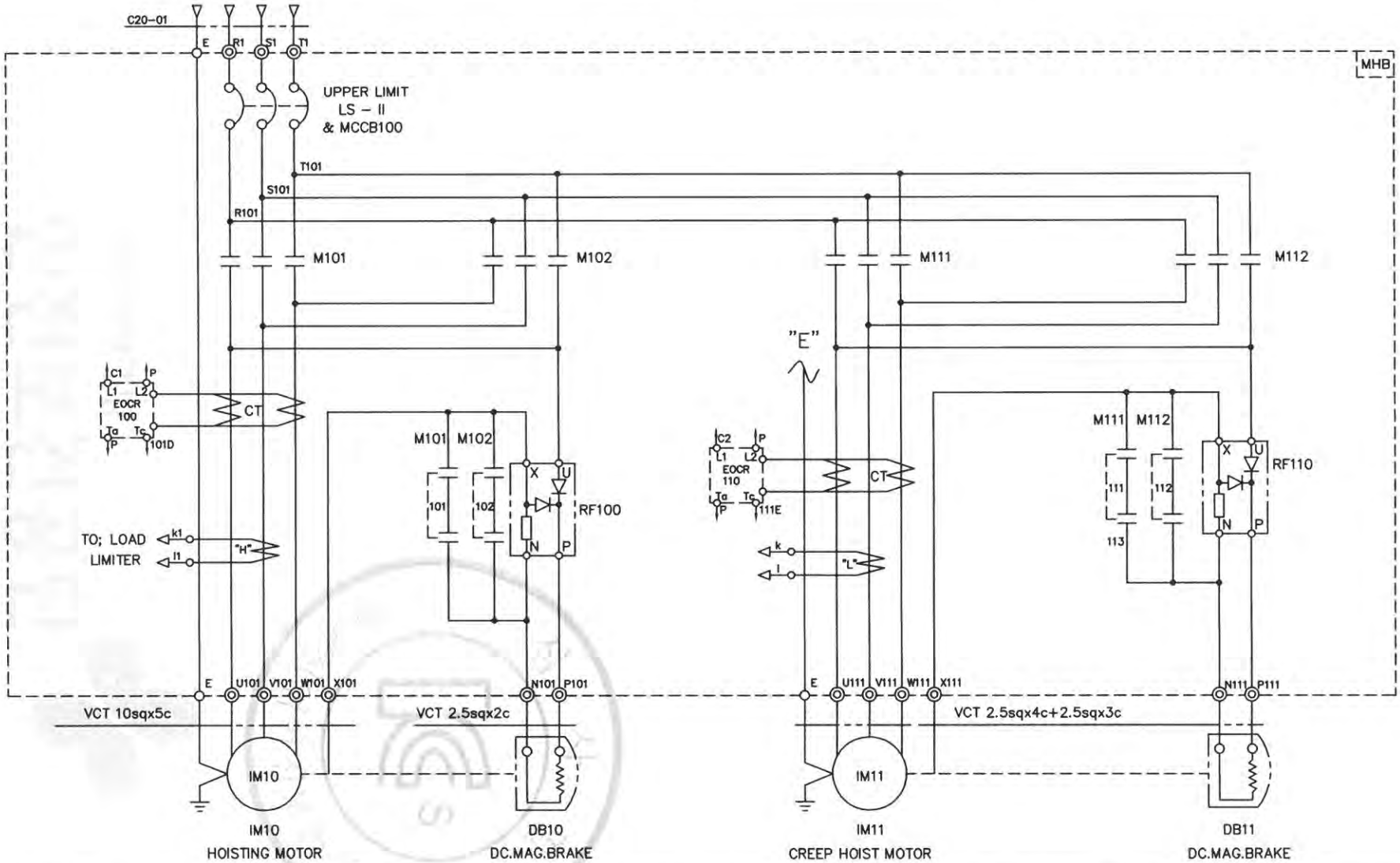

SPECIFICATION / SYMBOLS / DESCRIPTION	HOISTING POWER	HOISTING MOTOR	CREEP MOTOR	DC.MAG' BRAKE	NO FUSE BREAKER	TRANSFORMER	FUSE		MAGNET CONTACTOR		UPPER LIMIT	ELECTRIC OVER CURRENT RELAY		SILICON RECTIFIER		LOAD LIMITER	CABLE
	HOIST	IM 10	IM 11	DB10, 11	LS-II & MCCB100	TR 1	F11,F12	F13	M101,M102	M111,M112	LS-I, LS-II	EOCR100	EOCR110	RF100	RF110	LOAD LIMITER	C20-01
	20TON AC3PH 480V 60Hz	17KWx8P	1.8KWx8P	DC 100V	ABS-63AF/60AT	480/110V,120V,200VA	2A	5A	MC-130a	DMC22b	AC 600V 3A	SS-60	SS-30	SR-60	SR-30	JDL-100	VCT 10sqx4c
SELECTION / MAKER	KUKDONG				LS	SHINHAN	-		LS	DONG-A	KUK DONG	ASECO				JUNGHO	DONGIL

MK	DATE	REVISIONS	CHK.	APP.
4				
3				
2				
1				

CUSTOMER		DRAWING	DESIGN	CHECKED	APPROVED	SCALE	DATE	ORDER NO.
DRAWING TITLE	MAIN (20T) CREEP HOISTING POWER & CONTROL					NONE		
	CIRCUIT DIAGRAM	극동호이스트 주식회사 KUK DONG HOIST CO., LTD				DWG. NO	KDC20E62	

192.168.11.51 / 2020-03-16 10:52:57

불법복제 및 배포금지

1	2	3	4	5	6	7	8	9	10	11	12	13	14	15	16	17	18	19	20

POWER CIRCUIT

ADR'S NO. B1

HOISTING MOTION | CREEP HOIST MOTION

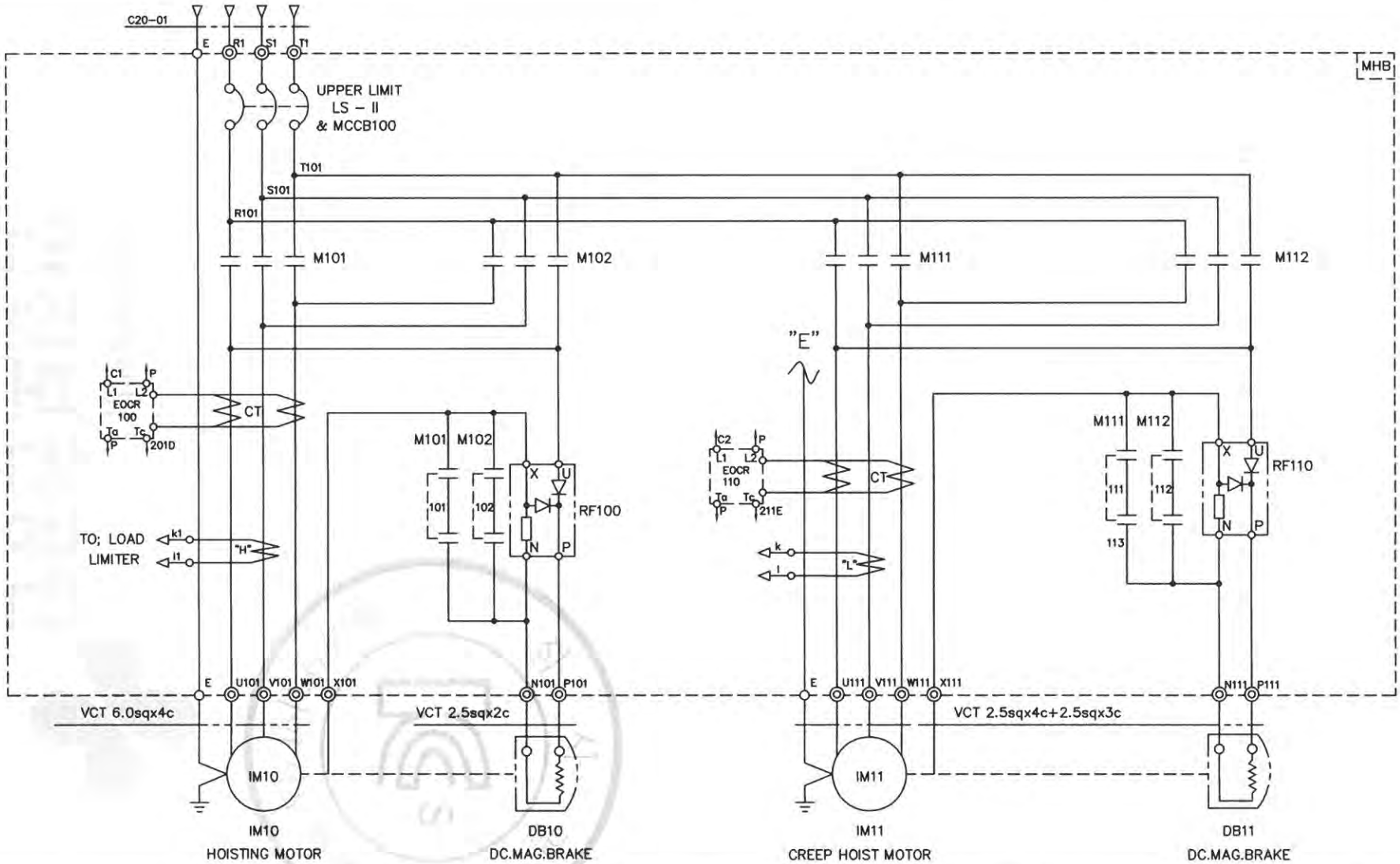

SPECIFICATION / SYMBOLS	HOISTING POWER	HOISTING MOTOR	CREEP MOTOR	DC.MAG' BRAKE	NO FUSE BREAKER	TRANSFORMER	FUSE		MAGNET CONTACTOR		UPPER LIMIT	ELECTRIC OVER CURRENT RELAY		SILICON RECTIFIER		LOAD LIMITER	CABLE
DESCRIPTION	HOIST	IM 10	IM 11	DB10, 11	LS-II & MCCB100	TR 1	F11,F12	F13	M101,M102	M111,M112	LS-I, LS-II	EOCR100	EOCR110	RF100	RF110	LOAD LIMITER	C20-01
	10TON AC3PH 480V 60Hz	9KWx8P	1.1KWx8P	DC 100V	ABS-53c/50AT	480/110V,120V,200VA	2A	5A	DMC65	DMC22b	AC 600V 3A	SS-60	SS-30	SR-60	SR-30	JDL-100	VCT 6.0sqx4c
SELECTION / MAKER	KUKDONG				LS	SHINHAN	-		DONG-A		KUK DONG	ASECO				JUNGHO	DONGIL

MK	DATE	REVISIONS	CHK.	APP.
4				
3				
2				
1				

CUSTOMER

DRAWING TITLE: AUX (10T) CREEP HOISTING POWER & CONTROL

CIRCUIT DIAGRAM

DRAWING	DESIGN	CHECKED	APPROVED	SCALE	DATE	ORDER NO.
				NONE		

극동호이스트 주식회사
KUK DONG HOIST CO., LTD

DWG. NO KDC10E62

192.168.11.51 / 2020-03-16 10:52:57

불법복제 및 배포금지

1	2	3	4	5	6	7	8	9	10	11	12	13	14	15	16	17	18	19	20

POWER CIRCUIT

TRAVERSING MOTION

ADR'S NO. C1

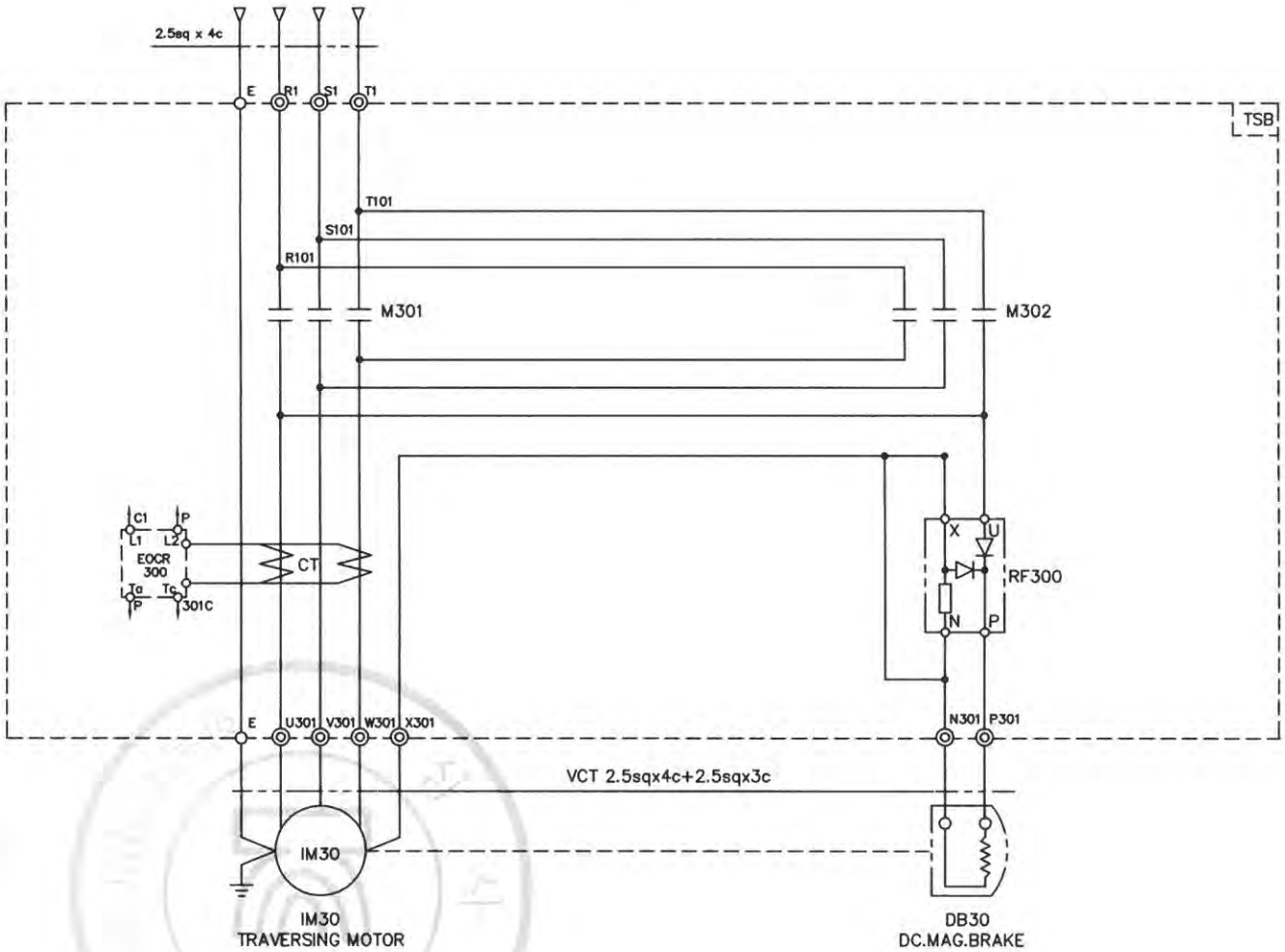

SPECIFICATION / SYMBOLS / DESCRIPTION	TRAVERSING MOTOR	DC MAG' BRAKE	MAGNET CONTACTOR	SILICON RECTIFIER	ELECTRIC OVER CURRENT RELAY	LIMIT SWTCH
	IM 30	DB 30	M301 , M302	RF 300	EOCR 300	LS-301 , LS-302
	1.5KW x 4P AC 3PH 480V 60Hz	DC 100V	DMC22b	SR-30	SS-05	KG-L001
	1.0KW x 6P AC 3PH 480V 60Hz	DC 100V	DMC22b	SR-30	SS-05	KG-L001
SELECTION MAKER	KUKDONG		DONG-A	ASECO		KG-AUTO

MK	DATE	REVISIONS	CHK.	APP.
4				
3				
2				
1				

CUSTOMER		DRAWING	DESIGN	CHECKED	APPROVED	SCALE	DATE	ORDER NO.
DRAWING TITLE	TRAVERSING POWER CONTROL CIRCUIT DIAGRAM					NONE		

극동호이스트 주식회사
KUK DONG HOIST CO., LTD

DWG. NO KDC20E63

192.168.11.51 / 2020-03-16 10:52:57

불법복제 및 배포금지

1	2	3	4	5	6	7	8	9	10	11	12	13	14	15	16	17	18	19	20

POWER CIRCUIT

TRAVERSING MOTION

ADR'S NO. C2

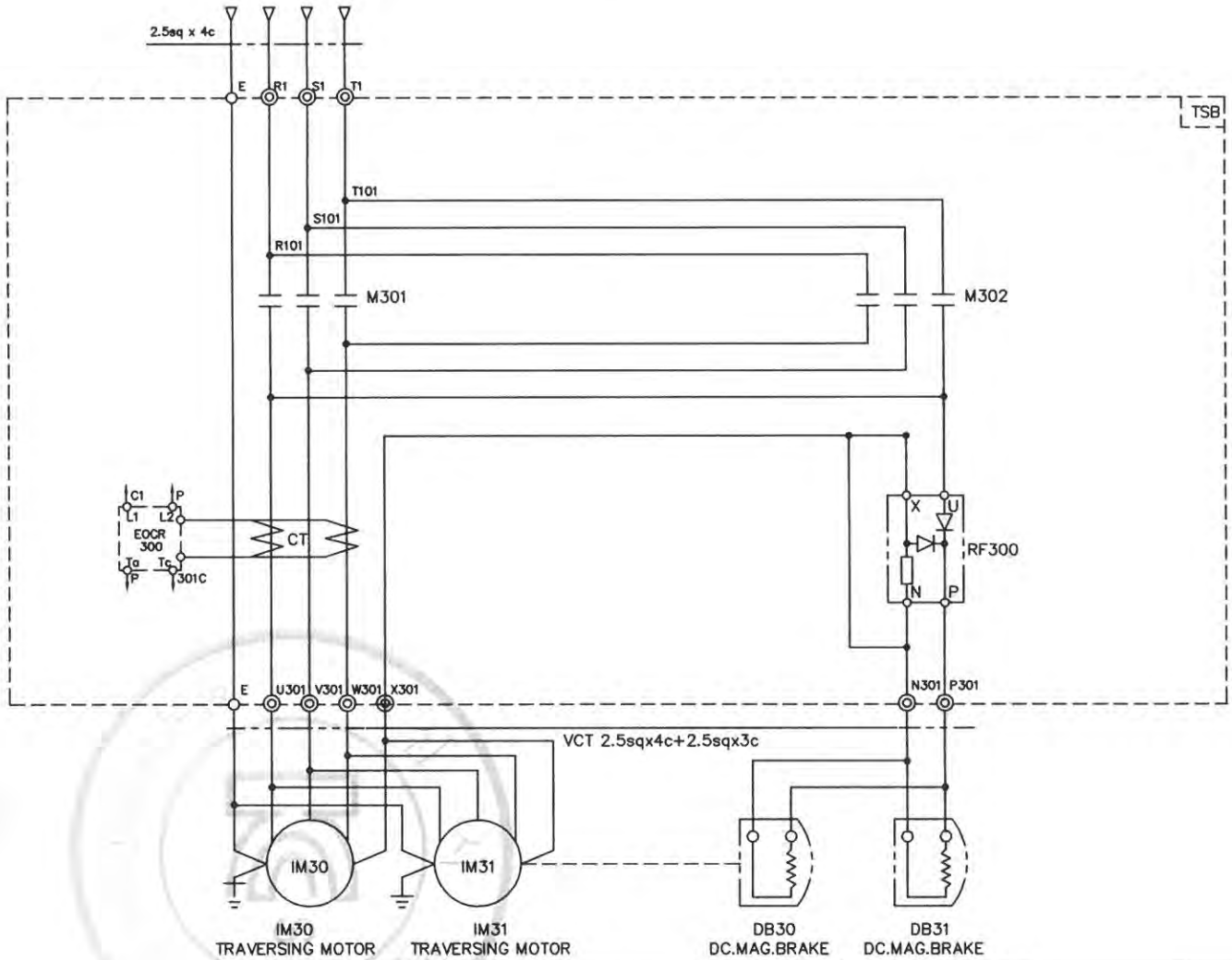

SPECIFICATION / SYMBOLS / DESCRIPTION	TRAVERSING MOTOR	DC MAG' BRAKE	MAGNET CONTACTOR	SILICON RECTIFIER	ELECTRIC OVER CURRENT RELAY	LIMIT SWTCH
	IM 30 , 1M31	DB 30	M301 , M302	RF 300	EOCR 300	LS-301 , LS-302
	1.5KW x 4P AC 3PH 480V 60Hz	DC 100V	DMC22b	SR-30	SS-30	KG-L001
	1.0KW x 6P AC 3PH 480V 60Hz	DC 100V	DMC22b	SR-30	SS-30	KG-L001
SELECTION / MAKER	KUK DONG		DONG-A	ASECO		KG-AUTO

MK	DATE	REVISIONS	CHK.	APP.
4				
3				
2				
1				

CUSTOMER		DRAWING	DESIGN	CHECKED	APPROVED	SCALE	DATE	ORDER NO.
DRAWING TITLE	TRAVERSING POWER CONTROL CIRCUIT DIAGRAM					NONE		
		극동호이스트 주식회사 KUK DONG HOIST CO., LTD				DWG. NO	KDC20E64	

192.168.11.51 / 2020-03-16 10:52:57

불법복제 및 배포금지

192.168.11.51 / 2020-03-16 10:52:57

불법복제 및 배포금지

CONTROL CIRCUIT 1

EMERGENCY STOP | M/A SELECT

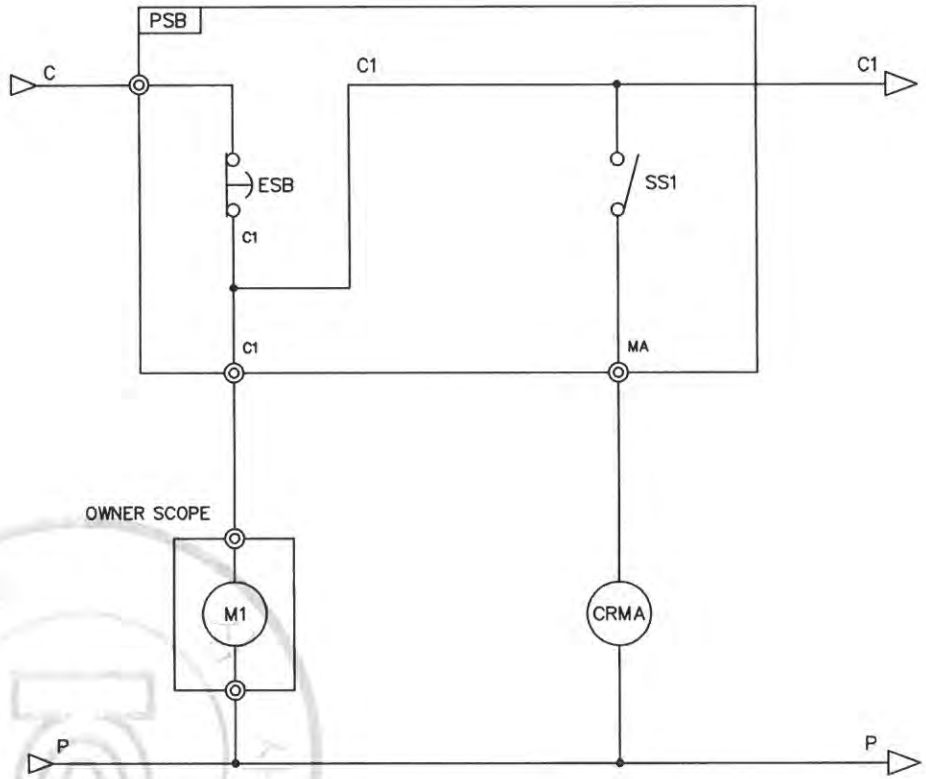

SPECIFICATION	EMERGENCY STOP	SELECT S/W	MINI RELAY
SYMBOLS	ESB	SS1	CRMA
DESCRIPTION	AC 250V 6A	KDS	MY4
MAKER	KG-AUTO	KG-AUTO	KACON

REV	DATE	DESCRIPTION	DRAWN	CHECK	APPRVD
A	19.FEB.2020	REDRAWING	K.H.Han	-	-

TITLE: CONTROL CIRCUIT DIAGRAM 1

KDC20/10-MA

CUSTOMER

극동호이스트 주식회사
KUKDONG HOIST CO., LTD.

DESIGN	SCALE	SHT. NO.	ORDER NO.

DWG. NO.

불법복제 및 배포금지

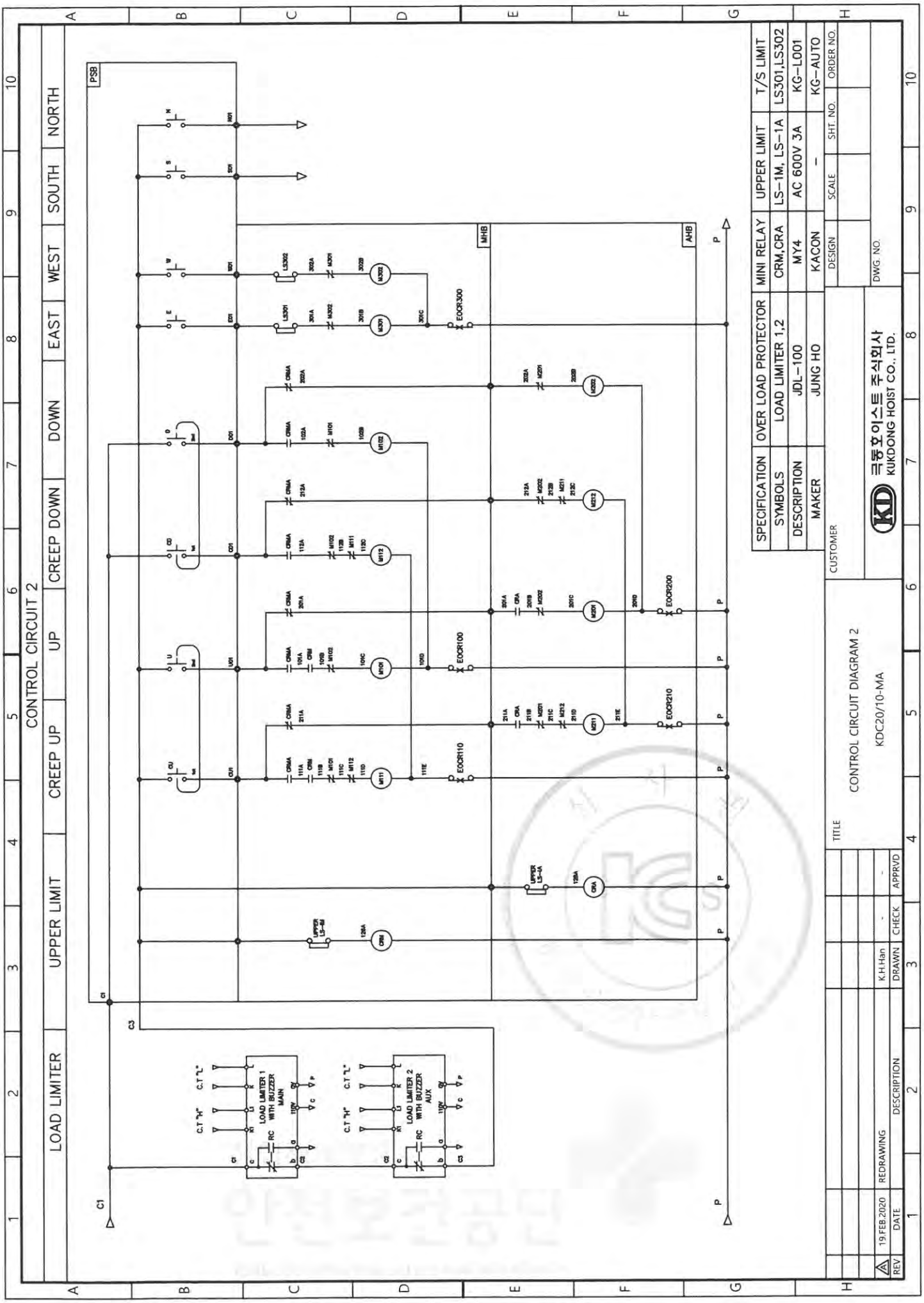

192.168.11.51 / 2020-03-16 10:52:57

불법복제 및 배포금지

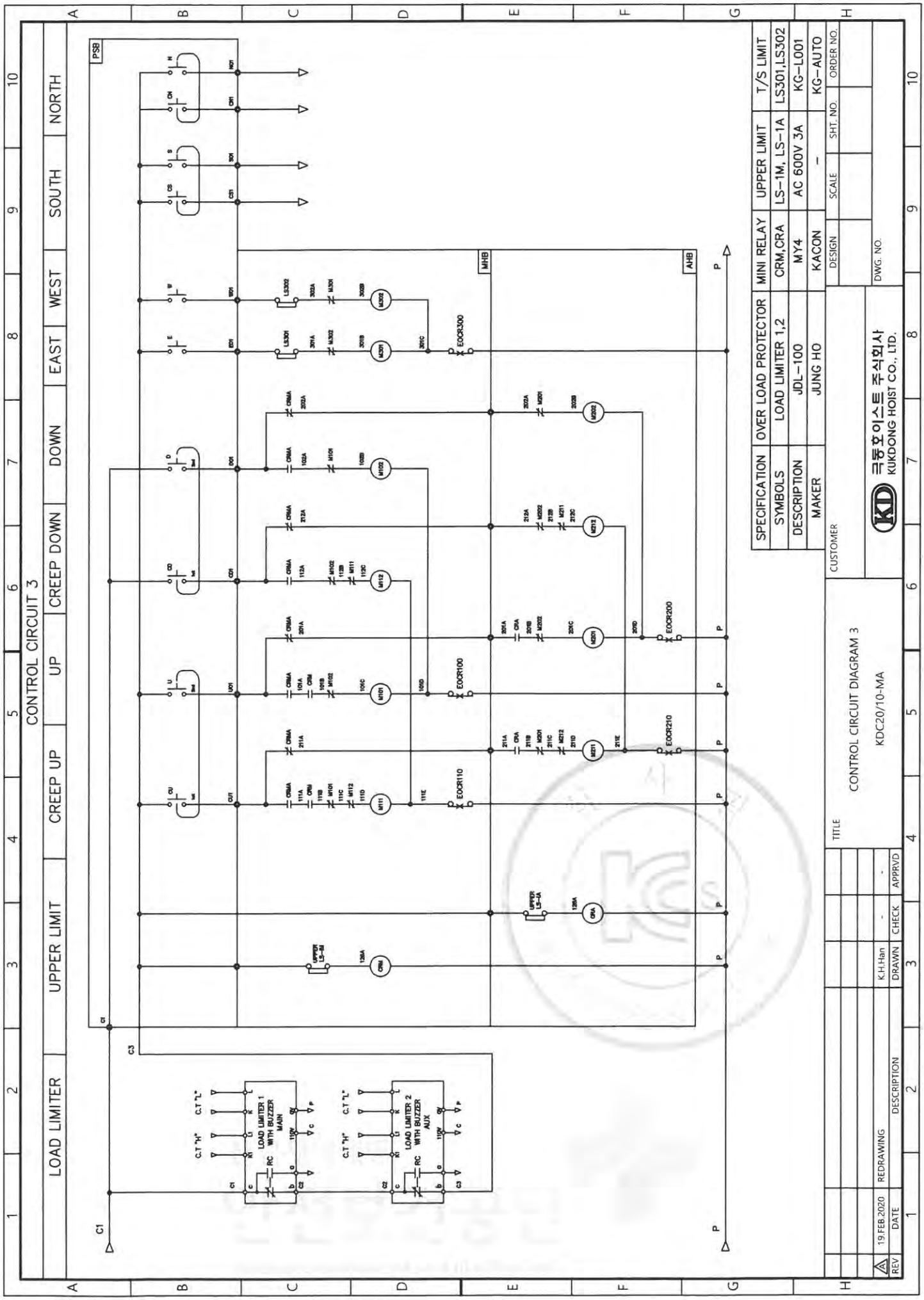

192.168.11.51 / 2020-03-16 10:52:57

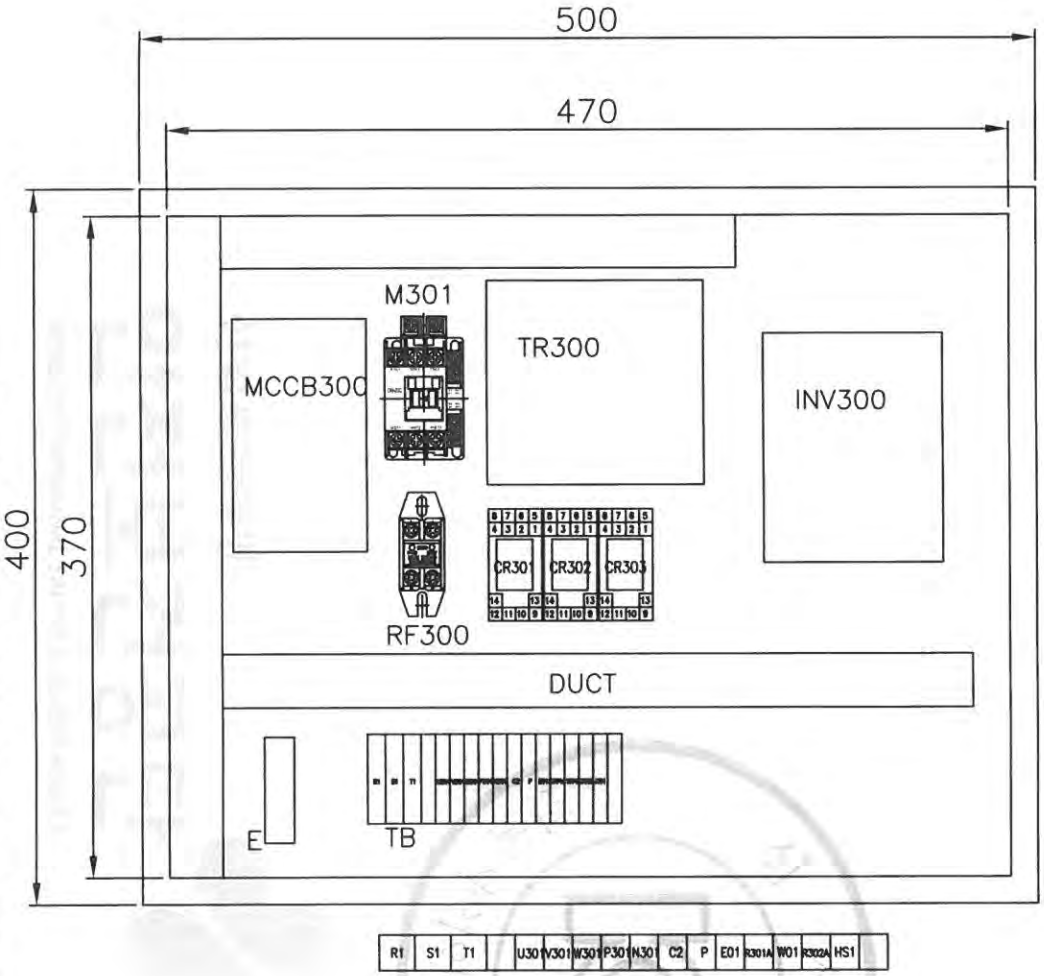

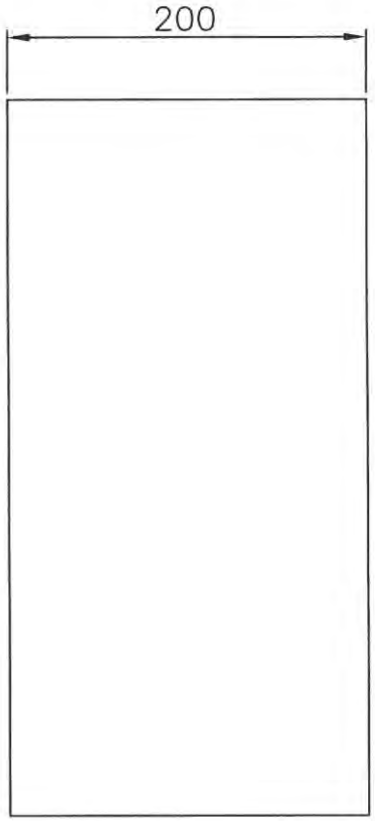

NO.	DESCRIPTION	MT'L	SUB QT'Y	TOTAL QT'Y	SUB WEIGHT(Kg)	TOTAL WEIGHT(Kg)	REMARKS.
2	속판	SS400		1			
1	T/S BOX	PUR		1			
11	EARTH BUS BAR	PUR		1			
10	DUCT	PUR		1			
9	TERMINAL BLOCK	PUR		1			
8	INVERTER	PUR		1			
7	TR	PUR		1			
6	RELAY & SCOKET	PUR		1			
5	RF	PUR		1			
4	MC	PUR		1			
3	MCCB	PUR		1			

PROJECT				DATE	DIM
					mm
TITLE	T/S CONTROL PANEL(INVERTER)			SCALE	PROJECTION
				A3/3	3rd
DRAWN	DESIGNED	CHECKED	APPROVED	REF. DRAWING	

극동호이스트 주식회사
KUK DONG HOIST CO., LTD.

SHEET No.

DWG No. KDC20EI001

불법복제 및 배포금지

192.168.11.51 / 2020-03-16 10:52:57

TRAVERSING MOTION

ADR'S NO.

POWER CIRCUIT DIAGRAM

CONTROL CIRCUIT DIAGRAM

BRAKE | EAST | WEST | HIGH SPEED

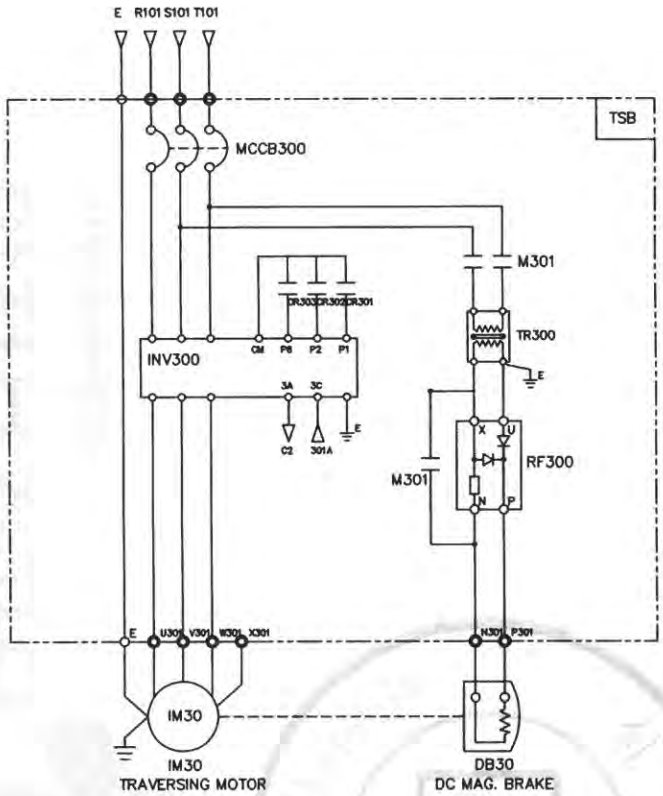

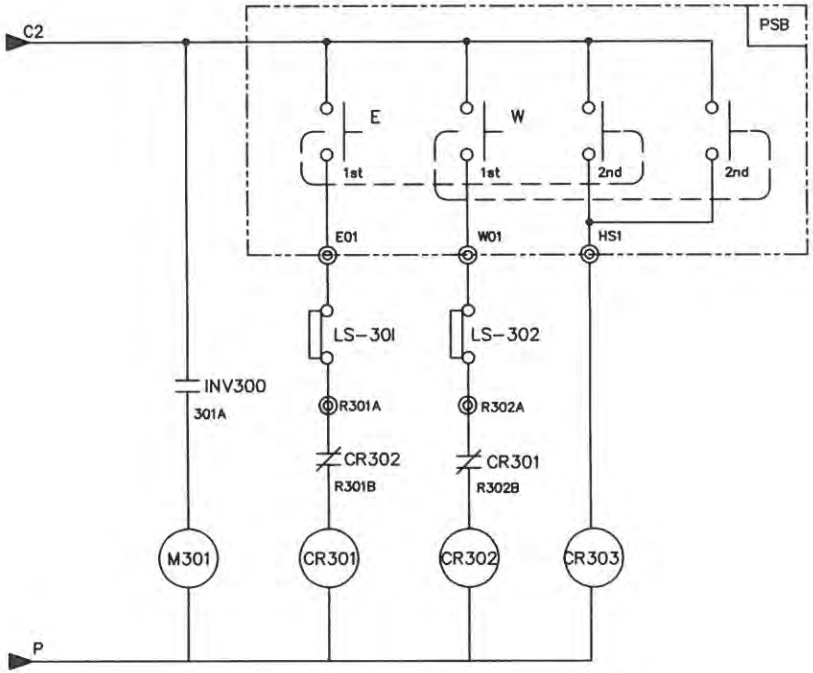

SPECIFICATION / SYMBOLS / DESCRIPTION	TRAVERSING POWER	TRAVERSING MOTOR	DC.MAG' BRAKE	NO FUSE BREAKER	TRANSFORMER	BRAKE MAGNET	CONTROL RELAY	INVERTER	SILICON RECTIFIER	LIMIT S/W
		IM 30	DB30	MCCB300	TR 300	M301	CR301,302,303	INV300	RF300	LS-301,302
	AC 3PH 220V 60Hz	1.0KW x 6P	DC 100V	ABS-33c/10AT	-	DMC22b	MINI 4a4b(Coil AC110V)	SV015iG5A-2	SR-30	KG-L001
	AC 3PH 380(440,460,480)V 60Hz	1.0KW x 6P	DC 100V	ABS-33c/10AT	380(440,460,480)/220V,200VA	DMC22b	MINI 4a4b(Coil AC110V)	SV015iG5A-4	SR-30	KG-L001
SELECTION / MAKER	KUK DONG HOIST							LS	ASECO	KG-AUTO

MK	DATE	REVISIONS	CHK.	APP.
4				
3				
2				
1				

CUSTOMER	INVERTER CONTROL
DRAWING TITLE	TRAVERSING POWER & CONTROL CIRCUIT DIAGRAM

DRAWING	DESIGN	CHECKED	APPROVED	SCALE	DATE	ORDER NO.

극동호이스트 주식회사
KUK DONG HOIST CO., LTD

DWG. NO KDC20EI002

불법복제 및 배포금지

192.168.11.51 / 2020-03-16 10:52:57

1	2	3	4	5	6	7	8	9	10	11	12	13	14	15	16	17	18	19	20

TRAVERSING MOTION

ADR'S NO.

POWER CIRCUIT DIAGRAM

CONTROL CIRCUIT DIAGRAM

BRAKE	EAST	WEST	HIGH SPEED

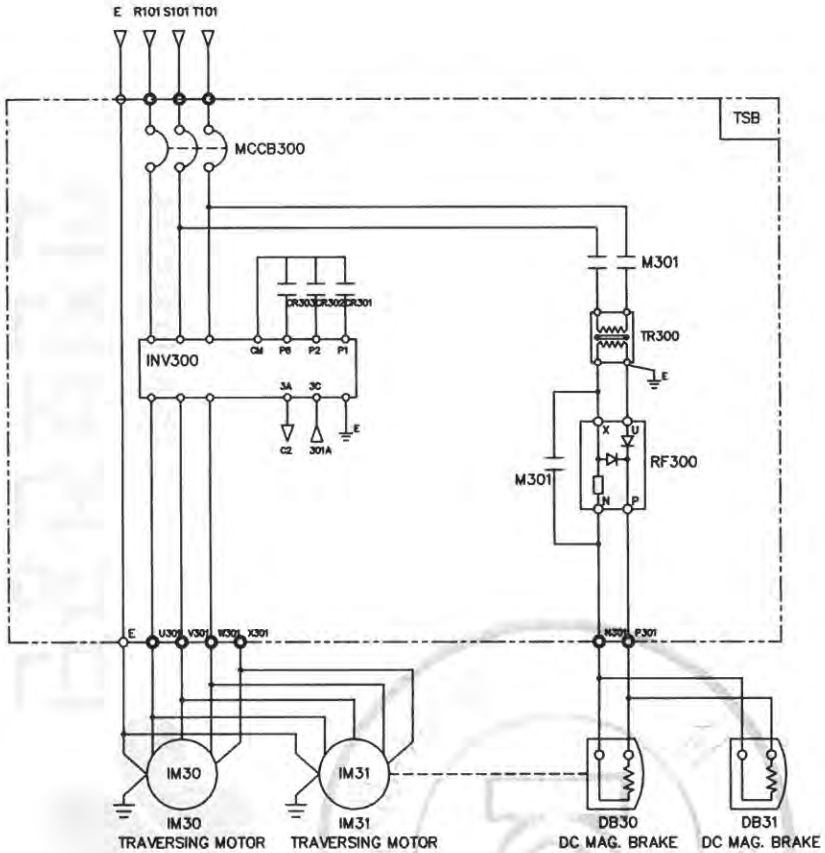

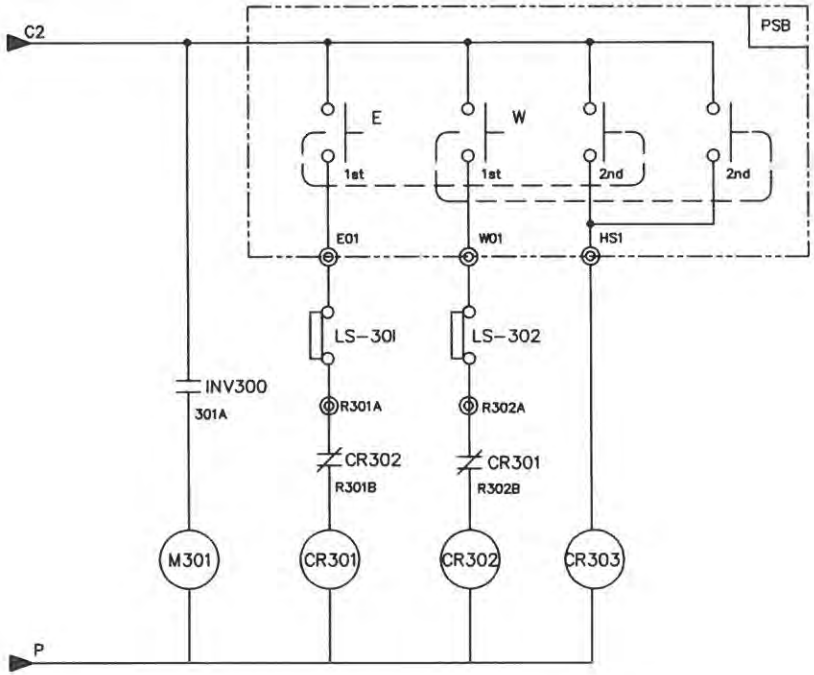

SPECIFICATION / SYMBOLS / DESCRIPTION	TRAVERSING POWER	TRAVERSING MOTOR	DC.MAG' BRAKE	NO FUSE BREAKER	TRANSFORMER	BRAKE MAGNET	CONTROL RELAY	INVERTER	SILICON RECTIFIER	LIMIT S/W
		IM 30,31	DB30,31	MCCB300	TR 300	M301	CR301,302,303	INV300	RF300	LS-301,302
	AC 3PH 220V 60Hz	1.0KW x 6P	DC 100V	ABS-33c/15AT	-	DMC22b	MINI 4a4b(Coil AC110V)	SV022iG5A-2	SR-30	KG-L001
	AC 3PH 380(440,460,480)V 60Hz	1.0KW x 6P	DC 100V	ABS-33c/15AT	380(440,460,480)/220V,300VA	DMC22b	MINI 4a4b(Coil AC110V)	SV022iG5A-4	SR-30	KG-L001
SELECTION / MAKER	KUK DONG HOIST							LS	ASECO	KG-AUTO

MK	DATE	REVISIONS	CHK.	APP.
4				
3				
2				
1				

CUSTOMER	INVERTER CONTROL
DRAWING TITLE	TRAVERSING POWER & CONTROL CIRCUIT DIAGRAM

DRAWING	DESIGN	CHECKED	APPROVED	SCALE	DATE	ORDER NO.

극동호이스트 주식회사
KUK DONG HOIST CO., LTD

DWG. NO KDC20EI003

불법복제 및 배포금지

192.168.11.51 / 2020-03-16 10:52:57

1	2	3	4	5	6	7	8	9	10	11	12	13	14	15	16	17	18	19	20

TRAVERSING MOTION

ADR'S NO.

POWER CIRCUIT DIAGRAM

CONTROL CIRCUIT DIAGRAM

BRAKE	EAST	WEST	HIGH SPEED

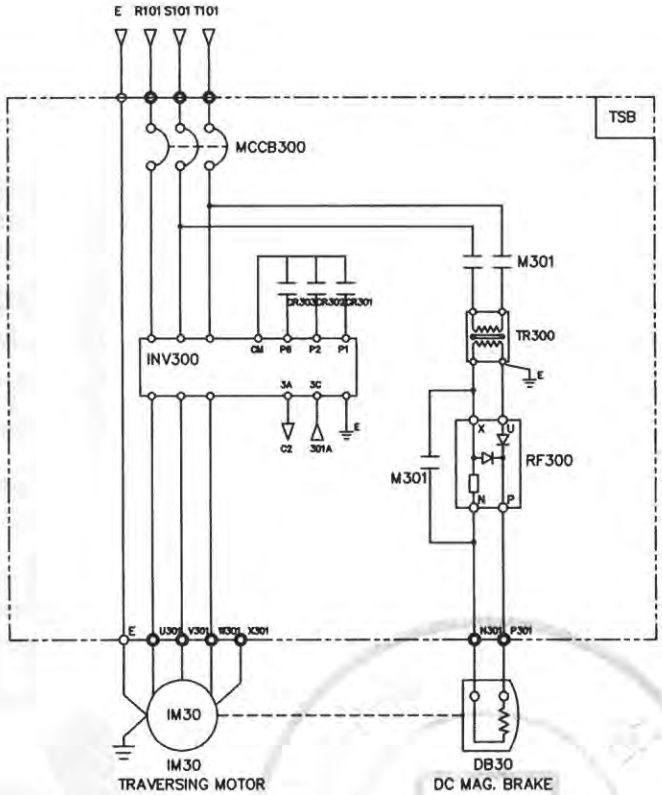

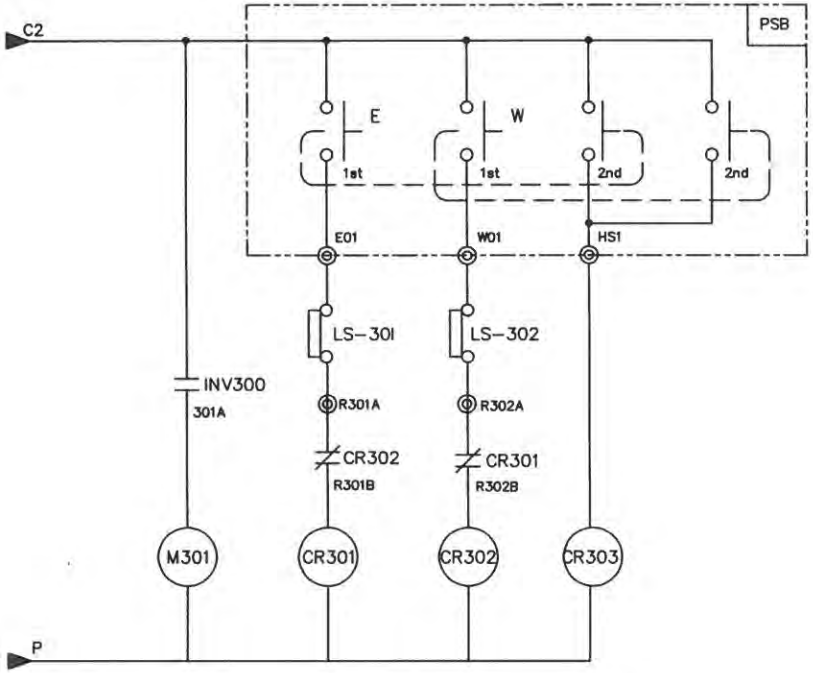

SPECIFICATION / SYMBOLS / DESCRIPTION	TRAVERSING POWER	TRAVERSING MOTOR	DC.MAG' BRAKE	NO FUSE BREAKER	TRANSFORMER	BRAKE MAGNET	CONTROL RELAY	INVERTER	SILICON RECTIFIER	LIMIT S/W
		IM 30	DB30	MCCB300	TR 300	M301	CR301,302,303	INV300	RF300	LS-301,302
	AC 3PH 220V 60Hz	1.5KW x 4P	DC 100V	ABS-33c/10AT	-	DMC22b	MINI 4a4b(Coil AC110V)	SV022iG5A-2	SR-30	KG-L001
	AC 3PH 380(440,460,480)V 60Hz	1.5KW x 4P	DC 100V	ABS-33c/10AT	380(440,460,480)/220V,200VA	DMC22b	MINI 4a4b(Coil AC110V)	SV022iG5A-4	SR-30	KG-L001
SELECTION / MAKER	KUK DONG HOIST							LS	ASECO	KG-AUTO

MK	DATE	REVISIONS	CHK.	APP.
4				
3				
2				
1				

CUSTOMER	INVERTER CONTROL
DRAWING TITLE	TRAVERSING POWER & CONTROL CIRCUIT DIAGRAM

DRAWING	DESIGN	CHECKED	APPROVED	SCALE	DATE	ORDER NO.

극동호이스트 주식회사
KUK DONG HOIST CO., LTD

DWG. NO KDC20EI004

192.168.11.51 / 2020-03-16 10:52:57

불법복제 및 배포금지

1	2	3	4	5	6	7	8	9	10	11	12	13	14	15	16	17	18	19	20

TRAVERSING MOTION

ADR'S NO.

POWER CIRCUIT DIAGRAM

CONTROL CIRCUIT DIAGRAM

BRAKE	EAST	WEST	HIGH SPEED

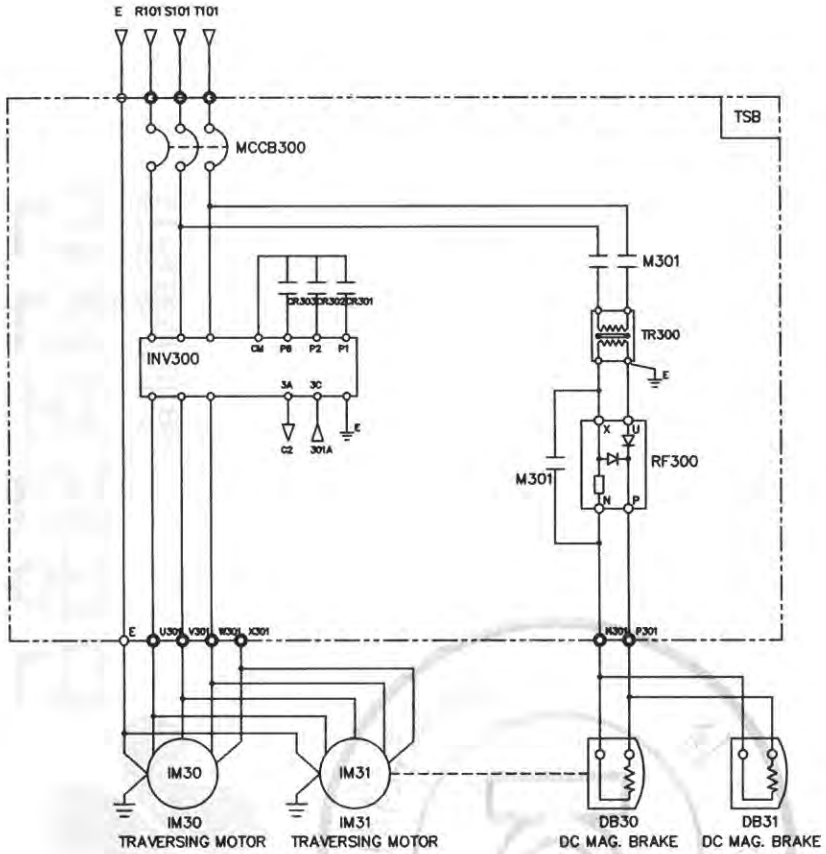

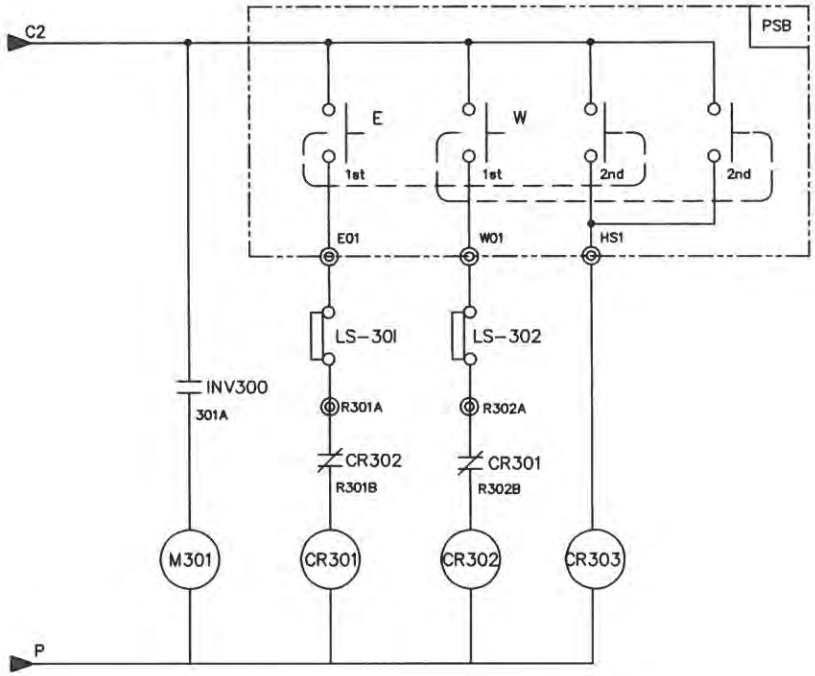

SPECIFICATION / SYMBOLS / DESCRIPTION	TRAVERSING POWER	TRAVERSING MOTOR	DC.MAG' BRAKE	NO FUSE BREAKER	TRANSFORMER	BRAKE MAGNET	CONTROL RELAY	INVERTER	SILICON RECTIFIER	LIMIT S/W
		IM 30,31	DB30,31	MCCB300	TR 300	M301	CR301,302,303	INV300	RF300	LS-301,302
	AC 3PH 220V 60Hz	1.5KW x 4P	DC 100V	ABS-33c/15AT	-	DMC22b	MINI 4a4b(Coil AC110V)	SV037iG5A-2	SR-30	KG-L001
	AC 3PH 380(440,460,480)V 60Hz	1.5KW x 4P	DC 100V	ABS-33c/15AT	380(440,460,480)/220V,300VA	DMC22b	MINI 4a4b(Coil AC110V)	SV037iG5A-4	SR-30	KG-L001
SELECTION / MAKER	KUK DONG HOIST							LS	ASECO	KG-AUTO

MK	DATE	REVISIONS	CHK.	APP.
4				
3				
2				
1				

CUSTOMER	INVERTER CONTROL
DRAWING TITLE	TRAVERSING POWER & CONTROL CIRCUIT DIAGRAM

DRAWING	DESIGN	CHECKED	APPROVED	SCALE	DATE	ORDER NO.

극동호이스트 주식회사
KUK DONG HOIST CO., LTD

DWG. NO KDC20EI005

192.168.11.51 / 2020-03-16 10:52:57

불법복제 및 배포금지

NO	DESCRIPTION	MATERIAL	Q'TY	SIZE	REMARK
1	PUSH BUTTON SWITCH	PUR.	1		

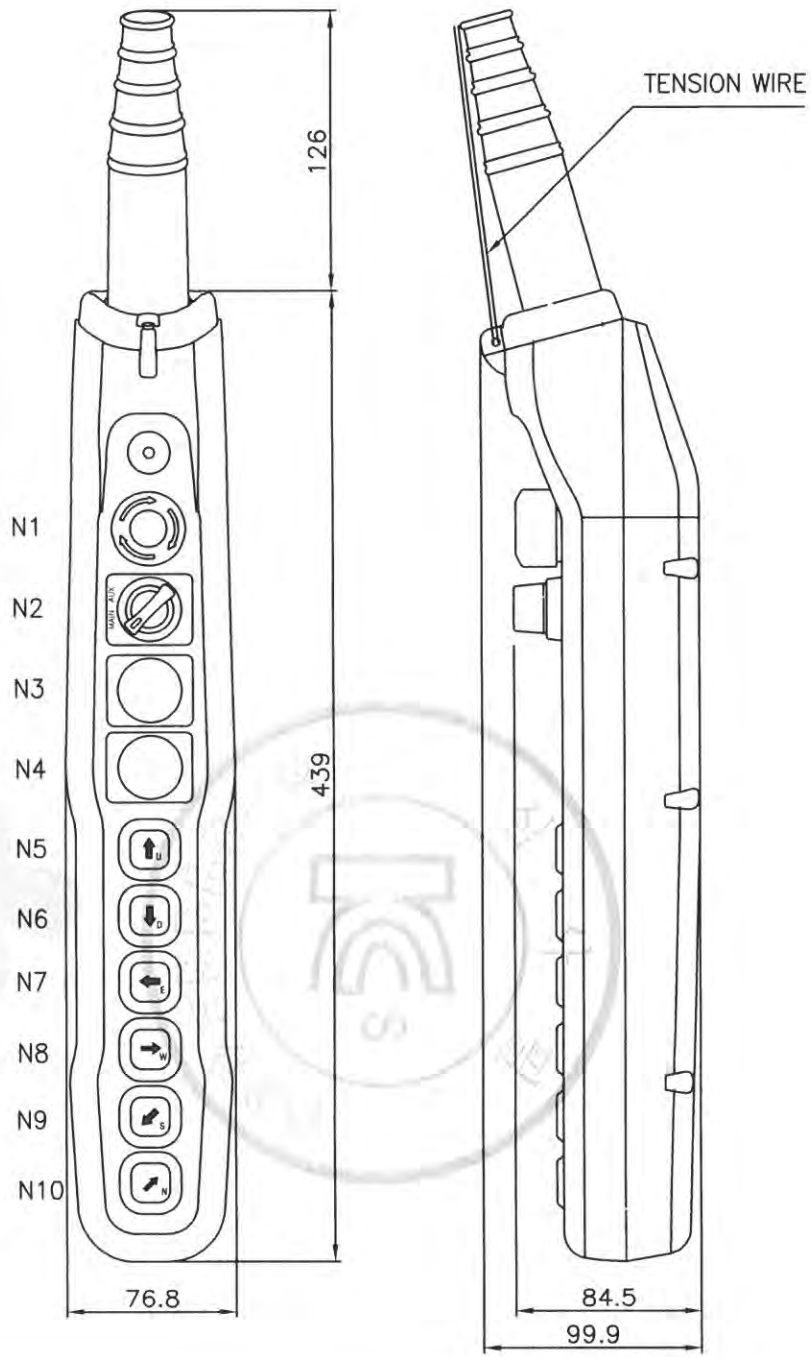

NOTE:

1. MATERIAL: ABS
2. COLOR: YELLOW
3. CONTACTOR: AC250V 6A
4. CABLE: VCT1.5sq
5. IP55 이상

구분 / 색상	조작버튼	표시등
적색	비상	비상
황색	비정상	비정상
녹색	정상	정상
청색	의무	의무
흰색,회색-흑색	지정된의미없음	기타

N10	N	NORTH(1STEP or 2STEP)	
N9	S	SOUTH(1STEP or 2STEP)	
N8	W	WEST(1STEP or 2STEP)	
N7	E	EAST(1STEP or 2STEP)	
N6	D	DOWN(2STEP)	
N5	U	UP(2STEP)	
N4	–	SPARE	
N3	–	SPARE	
N2	MAIN–AUX	MAIN–AUX	
N1	EBS	EMERGENCY STOP	
NO	NAME	DESCRIPTION	REMARK

No.	DATE	REVISION RECORD	DWG.	CHK.	APP.
1					
0	14.06.01	FIRST ISSUE	M.H.Kim		

Scale	N/S	Pro-jection	3rd ANGLES	Mass	Kg
OWNER					

Title: ELECTRIC WIRE HOIST
KDC20/10-MA
PENDANT CONTROL SWITCH

극동호이스트 주식회사
KUK DONG HOIST CO., LTD.

DWG No.

불법복제 및 배포금지

192.168.11.51 / 2020-03-16 10:52:57

불법복제 및 배포금지

DSR DSR WIRE CORP

ORIGINAL

SALES OFFICE : 7th floor, 145, Teheran-ro, Gangnam-gu, Seoul, Korea
TEL : 82-2-3420-3500, FAX : 82-2-3420-3600, E-mail : sales@dsrcorp.com, http://www.dsrcorp.com

MILL TEST CERTIFICATE / CERTIFICATE OF INSPECTION

Certificate No : 201804-Do637-1
Reel/Coil No : 1
Purchaser : -

Date : 2018. 04. 18
P.O No : -
L/C No. : -
Invoice No : Do637-224

1. TYPE / GRADE

Construction : 6X37+FC
Diameter : 22.4 MM
Length : 1,000 MTRS
Specification : KS D 3514

Coating : BRIGHT
Grade : 1,770
Lay : RHRL
Lubrication : A-2

2. ROPE TEST RESULTS

Items	Norminal or Specified	Actual
Diameter	22.4 MM	22.9 MM
Breaking Strength	284.0 KN	291.5 KN
Lay Length	- MM	149 MM
Preforming	Good	Good

3. WIRE TEST RESULTS

Items	Norminal or Specified	Actual
Diameter	1.00 MM	1.01 MM
Tensile Strength	1,770 N/MM2	1,822 N/MM2
Break Force	1,389 N	1,459 N
Torsion	27	35
Weight of Coating	- G/M2	- G/M2

We hereby certify that the above results are true and correct in every detail.

CHEMICAL ANALYSIS OF WIRE ROD

Charge No	Chemical Composition (%)				
	C	Si	Mn	P	S
SF 94504	0.73	0.19	0.46	0.010	0.009

Approval or Inspection Possibility

WIRE ROPE
Suncheon Factory : 15, Sandan 1-gil, Seo-myeon, Suncheon-si Jeonnanam-do, Korea
Yulchon Factory : 80-21, Yulchonsandan 1-ro, Haeryong-myeon, Suncheon-si, Jeonnanam-do, Korea

ISO, ISO(YUI) ISO(YUI) ISO(YUI) OHSAS(YUI) JIS G 3525 (KSKR 08022) JIS G 3537 (KSKR 08023) KS D 3514 (제8173호) KS D 7007 (제8174호)

ABS LLOYD'S NK KR DNV GL BV RINA CCS RS

WIRE
Suncheon 2Factory : 38, Sandan 4-gil, Seo-myeon, Suncheon-si Jeonnanam-do, Korea

ISO JIS G 3521 (KSKR 08020) JIS G 3522 (KSKR 08021) KS D 3510 (제8172호)

Quality Management Dept.

Chief Inspector

192.168.11.51 / 2020-03-16 10:52:57

불법복제 및 배포금지

DSR WIRE CORP

ORIGINAL

SALES OFFICE : 7th floor, 145, Teheran-ro, Gangnam-gu, Seoul, Korea
TEL : 82-2-3420-3500, FAX : 82-2-3420-3600, E-mail : sales@dsrcorp.com, http://www.dsrcorp.com

MILL TEST CERTIFICATE / CERTIFICATE OF INSPECTION

Certificate No : 201810-Do637-1
Reel/Coil No : 1 - 2
Purchaser : -

Date : 2018. 10. 10
P.O No : -
L/C No. : -
Invoice No : Do637-160

1. TYPE / GRADE

Construction : 6X37+FC
Diameter : 16 MM
Length : 1,000 MTRS X 2 R/L
Specification : KS D 3514

Coating : BRIGHT
Grade : 1,770
Lay : RHRL
Lubrication : A-2

2. ROPE TEST RESULTS

Items	Norminal or Specified	Actual
Diameter	16 MM	16.4 MM
Breaking Strength	145.0 KN	149 KN
Lay Length	- MM	107 MM
Preforming	Good	Good

3. WIRE TEST RESULTS

Items	Norminal or Specified	Actual
Diameter	0.72 MM	0.73 MM
Tensile Strength	1,770 N/MM2	1,833 N/MM2
Break Force	720 N	767 N
Torsion	27	40
Weight of Coating	- G/M2	- G/M2

We hereby certify that the above results are true and correct in every detail.

CHEMICAL ANALYSIS OF WIRE ROD

Charge No	Chemical Composition (%)				
	C	Si	Mn	P	S
SF 97502	0.71	0.20	0.47	0.009	0.007

Approval or Inspection Possibility

WIRE ROPE
Suncheon Factory : 15, Sandan 1-gil, Seo-myeon, Suncheon-si Jeonranam-do, Korea
Yulchon Factory : 80-21, Yulchonsandan 1-ro, Haeryong-myeon, Suncheon-si, Jeonranam-do, Korea

ISO, ISO(YUI) ISO/TS(YUI) ISO(YUI) OHSAS(YUI) JIS G 3525 (KSKR 08022) JIS G 3537 (KSKR 08023) KS D 3514 (KB1738) KS D 7007 (KB1745)

ABS LLOYD'S NK KR DNV GL BV RINA CCS RS

WIRE
Suncheon 2Factory : 38, Sandan 4-gil, Seo-myeon, Suncheon-si Jeonranam-do, Korea

ISO JIS G 3521 (KSKR 08020) JIS G 3522 (KSKR 08021) KS D 3510 (KB172)

Quality Management Dept.

Chief Inspector

192.168.11.51 / 2020-03-16 10:52:57

E.O.C.R 권고 SETTING치

* POWER SOURCE : AC 3¢ 220V 60Hz

극동호이스트(주)

HOIST	MOTOR 용량	MOTOR 정격 전류	DRIVE TYPE	E.O.C.R TYPE	권고 SETTING 치			REMARK
					DELAY TIME	OPERATION TIME	CURRENT	
C15 TON	13KW x 8P	59.0 A	1 DRAVE	SS-100	3 SEC	1 SEC	64.9 A	
	1.8KW x 8P	11.0 A	1 DRAVE	SS-30	3 SEC	1 SEC	12.1 A	
C20 TON	17KW x 8P	76.6 A	1 DRAVE	SS-100	3 SEC	1 SEC	84.3 A	
	1.8KW x 8P	11.0 A	1 DRAVE	SS-30	3 SEC	1 SEC	12.1 A	
C30 TON	17KW x 8P	76.6 A	1 DRAVE	SS-100	3 SEC	1 SEC	84.3 A	
	1.8KW x 8P	11.0 A	1 DRAVE	SS-30	3 SEC	1 SEC	12.1 A	
C35 TON	33KW x 6P	126.6 A	1 DRAVE	SS-150	3 SEC	1 SEC	139.3 A	
	3.7KW x 4P	16.0 A	1 DRAVE	SS-30	3 SEC	1 SEC	17.6 A	
C40 TON	33KW x 6P	126.6 A	1 DRAVE	SS-150	3 SEC	1 SEC	139.3 A	
	3.7KW x 4P	16.0 A	1 DRAVE	SS-30	3 SEC	1 SEC	17.6 A	
C50TON	33KW x 6P	126.6 A	1 DRAVE	SS-150	3 SEC	1 SEC	139.3 A	
	3.7KW x 4P	16.0 A	1 DRAVE	SS-30	3 SEC	1 SEC	17.6 A	
C60 TON	33KW x 6P	126.6 A	1 DRAVE	SS-150	3 SEC	1 SEC	139.3 A	
	3.7KW x 4P	16.0 A	1 DRAVE	SS-30	3 SEC	1 SEC	17.6 A	
C70 TON	33KW x 6P	126.6 A	1 DRAVE	SS-150	3 SEC	1 SEC	139.3 A	
	3.7KW x 4P	16.0 A	1 DRAVE	SS-30	3 SEC	1 SEC	17.6 A	

NOTE

1. 상기 TABLE의 수치는 권고 SETTING 수치이며 MOTOR의 특성 및 현장 조건에 따라 변경 가능함.

불법복제 및 배포금지

192.168.11.51 / 2020-03-16 10:52:57

E.O.C.R 권고 SETTING치

* POWER SOURCE : AC 3¢ 380V 60Hz

극동호이스트(주)

HOIST	MOTOR 용량	1 정격 전류	DRIVE TYPE	E.O.C.R TYPE	권고 SETTING 치			REMARK
					DELAY TIME	OPERATION TIME	CURRENT	
C15 TON	13KW x 8P	34.2 A	1 DRAVE	SS-60	3 SEC	1 SEC	37.6 A	
	1.8KW x 8P	6.4 A	1 DRAVE	SS-30	3 SEC	1 SEC	7.0 A	
C20 TON	17KW x 8P	44.3 A	1 DRAVE	SS-60	3 SEC	1 SEC	48.7 A	
	1.8KW x 8P	6.4 A	1 DRAVE	SS-30	3 SEC	1 SEC	7.0 A	
C30 TON	17KW x 8P	44.3 A	1 DRAVE	SS-60	3 SEC	1 SEC	48.7 A	
	1.8KW x 8P	6.4 A	1 DRAVE	SS-30	3 SEC	1 SEC	7.0 A	
C35 TON	33KW x 6P	77.3 A	1 DRAVE	SS-100	3 SEC	1 SEC	85.0 A	
	3.7KW x 4P	9.3 A	1 DRAVE	SS-30	3 SEC	1 SEC	10.2 A	
C40 TON	33KW x 6P	77.3 A	1 DRAVE	SS-100	3 SEC	1 SEC	85.0 A	
	3.7KW x 4P	9.3 A	1 DRAVE	SS-30	3 SEC	1 SEC	10.2 A	
C50 TON	33KW x 6P	77.3 A	1 DRAVE	SS-100	3 SEC	1 SEC	85.0 A	
	3.7KW x 4P	9.3 A	1 DRAVE	SS-30	3 SEC	1 SEC	10.2 A	
C60 TON	33KW x 6P	77.3 A	1 DRAVE	SS-100	3 SEC	1 SEC	85.0 A	
	3.7KW x 4P	9.3 A	1 DRAVE	SS-30	3 SEC	1 SEC	10.2 A	
C70 TON	33KW x 6P	77.3 A	1 DRAVE	SS-100	3 SEC	1 SEC	85.0 A	
	3.7KW x 4P	9.3 A	1 DRAVE	SS-30	3 SEC	1 SEC	10.2 A	

NOTE

1. 상기 TABLE의 수치는 권고 SETTING 수치이며 MOTOR의 특성 및 현장 조건에 따라 변경 가능함.

불법복제 및 배포금지

192.168.11.51 / 2020-03-16 10:52:57

E.O.C.R 권고 SETTING치

* POWER SOURCE : AC 3¢ 440V 60Hz

극동호이스트(주)

HOIST	MOTOR 용량	MOTOR 정격 전류	DRIVE TYPE	E.O.C.R TYPE	권고 SETTING 치			REMARK
					DELAY TIME	OPERATION TIME	CURRENT	
C15 TON	13KW x 8P	29.5 A	1 DRAVE	SS-60	3 SEC	1 SEC	32.5 A	
	1.8KW x 8P	5.5 A	1 DRAVE	SS-30	3 SEC	1 SEC	6.1 A	
C20 TON	17KW x 8P	38.3 A	1 DRAVE	SS-60	3 SEC	1 SEC	42.1 A	
	1.8KW x 8P	5.5 A	1 DRAVE	SS-30	3 SEC	1 SEC	6.1 A	
C30 TON	17KW x 8P	38.3 A	1 DRAVE	SS-60	3 SEC	1 SEC	42.1 A	
	1.8KW x 8P	5.5 A	1 DRAVE	SS-30	3 SEC	1 SEC	6.1 A	
C35 TON	33KW x 6P	63.3 A	1 DRAVE	SS-100	3 SEC	1 SEC	69.6 A	
	3.7KW x 4P	8.0 A	1 DRAVE	SS-30	3 SEC	1 SEC	8.8 A	
C40 TON	33KW x 6P	63.3 A	1 DRAVE	SS-100	3 SEC	1 SEC	69.6 A	
	3.7KW x 4P	8.0 A	1 DRAVE	SS-30	3 SEC	1 SEC	8.8 A	
C50 TON	33KW x 6P	63.3 A	1 DRAVE	SS-100	3 SEC	1 SEC	69.6 A	
	3.7KW x 4P	8.0 A	1 DRAVE	SS-30	3 SEC	1 SEC	8.8 A	
C60 TON	33KW x 6P	63.3 A	1 DRAVE	SS-100	3 SEC	1 SEC	69.6 A	
	3.7KW x 4P	8.0 A	1 DRAVE	SS-30	3 SEC	1 SEC	8.8 A	
C70 TON	33KW x 6P	63.3 A	1 DRAVE	SS-100	3 SEC	1 SEC	69.6 A	
	3.7KW x 4P	8.0 A	1 DRAVE	SS-30	3 SEC	1 SEC	8.8 A	

NOTE

1. 상기 TABLE의 수치는 권고 SETTING 수치이며 MOTOR의 특성 및 현장 조건에 따라 변경 가능함.

불법복제 및 배포금지

192.168.11.51 / 2020-03-16 10:52:57

E.O.C.R 권고 SETTING치

* POWER SOURCE : AC 3¢ 460V 60Hz

극동호이스트(주)

HOIST	MOTOR 용량	MOTOR 정격 전류	DRIVE TYPE	E.O.C.R TYPE	권고 SETTING 치			REMARK
					DELAY TIME	OPERATION TIME	CURRENT	
C15 TON	13KW x 8P	28.4 A	1 DRAVE	SS-60	3 SEC	1 SEC	31.2 A	
	1.8KW x 8P	5.3 A	1 DRAVE	SS-30	3 SEC	1 SEC	5.8 A	
C20 TON	17KW x 8P	36.7 A	1 DRAVE	SS-60	3 SEC	1 SEC	40.4 A	
	1.8KW x 8P	5.3 A	1 DRAVE	SS-30	3 SEC	1 SEC	5.8 A	
C30 TON	17KW x 8P	36.7 A	1 DRAVE	SS-60	3 SEC	1 SEC	40.4 A	
	1.8KW x 8P	5.3 A	1 DRAVE	SS-30	3 SEC	1 SEC	5.8 A	
C35 TON	33KW x 6P	60.5 A	1 DRAVE	SS-100	3 SEC	1 SEC	66.6 A	
	3.7KW x 4P	7.7 A	1 DRAVE	SS-30	3 SEC	1 SEC	8.5 A	
C40 TON	33KW x 6P	60.5 A	1 DRAVE	SS-100	3 SEC	1 SEC	66.6 A	
	3.7KW x 4P	7.7 A	1 DRAVE	SS-30	3 SEC	1 SEC	8.5 A	
C50 TON	33KW x 6P	60.5 A	1 DRAVE	SS-100	3 SEC	1 SEC	66.6 A	
	3.7KW x 4P	7.7 A	1 DRAVE	SS-30	3 SEC	1 SEC	8.5 A	
C60 TON	33KW x 6P	60.5 A	1 DRAVE	SS-100	3 SEC	1 SEC	66.6 A	
	3.7KW x 4P	7.7 A	1 DRAVE	SS-30	3 SEC	1 SEC	8.5 A	
C70 TON	33KW x 6P	60.5 A	1 DRAVE	SS-100	3 SEC	1 SEC	66.6 A	
	3.7KW x 4P	7.7 A	1 DRAVE	SS-30	3 SEC	1 SEC	8.5 A	

NOTE

1. 상기 TABLE의 수치는 권고 SETTING 수치이며 MOTOR의 특성 및 현장 조건에 따라 변경 가능함.

192.168.11.51 / 2020-03-16 10:52:57

불법복제 및 배포금지

E.O.C.R 권고 SETTING치

* POWER SOURCE : AC 3¢ 480V 60Hz

극동호이스트(주)

HOIST	MOTOR 용량	MOTOR 정격 전류	DRIVE TYPE	E.O.C.R TYPE	권고 SETTING 치			REMARK
					DELAY TIME	OPERATION TIME	CURRENT	
C15 TON	13KW x 8P	27.2 A	1 DRAVE	SS-30	3 SEC	1 SEC	29.9 A	
	1.8KW x 8P	5.1 A	1 DRAVE	SS-30	3 SEC	1 SEC	5.6 A	
C20 TON	17KW x 8P	35.2 A	1 DRAVE	SS-60	3 SEC	1 SEC	38.7 A	
	1.8KW x 8P	5.1 A	1 DRAVE	SS-30	3 SEC	1 SEC	5.6 A	
C30 TON	17KW x 8P	35.2 A	1 DRAVE	SS-60	3 SEC	1 SEC	38.7 A	
	1.8KW x 8P	5.1 A	1 DRAVE	SS-30	3 SEC	1 SEC	5.6 A	
C35 TON	33KW x 6P	58.0 A	1 DRAVE	SS-100	3 SEC	1 SEC	63.8 A	
	3.7KW x 4P	7.3 A	1 DRAVE	SS-30	3 SEC	1 SEC	8.0 A	
C40 TON	33KW x 6P	58.0 A	1 DRAVE	SS-100	3 SEC	1 SEC	63.8 A	
	3.7KW x 4P	7.3 A	1 DRAVE	SS-30	3 SEC	1 SEC	8.0 A	
C650 TON	33KW x 6P	58.0 A	1 DRAVE	SS-100	3 SEC	1 SEC	63.8 A	
	3.7KW x 4P	7.3 A	1 DRAVE	SS-30	3 SEC	1 SEC	8.0 A	
C60 TON	33KW x 6P	58.0 A	1 DRAVE	SS-100	3 SEC	1 SEC	63.8 A	
	3.7KW x 4P	7.3 A	1 DRAVE	SS-30	3 SEC	1 SEC	8.0 A	
C70 TON	33KW x 6P	58.0 A	1 DRAVE	SS-100	3 SEC	1 SEC	63.8 A	
	3.7KW x 4P	7.3 A	1 DRAVE	SS-30	3 SEC	1 SEC	8.0 A	

NOTE

1. 상기 TABLE의 수치는 권고 SETTING 수치이며 MOTOR의 특성 및 현장 조건에 따라 변경 가능함.

불법복제 및 배포금지

192.168.11.51 / 2020-03-16 10:52:57

LOAD LIMITER 권고 SETTING치

* POWER SOURCE : AC 3¢ 220V 60Hz

극동호이스트(주)

HOIST	MOTOR 용량	LOAD LIMITER 권고 SETTING치			LOAD CURRENT		C.T MODEL	연결단자 NO	C.T 용량	REMARK
		LOAD CURRENT	ADJ START TIME	SHOCK TIME	100%	110%				
C15 TON	13KW x 8P	110%	1 SEC	1 SEC	59.0 A	64.9 A	CT-2	K-K1, L-L1	5 V.A	
	1.8KW x 8P	110%	1 SEC	1 SEC	11.0 A	12.1 A	CT-2	K-K1, L-L1	5 V.A	
C20 TON	17KW x 8P	110%	1 SEC	1 SEC	76.6 A	84.3 A	CT-2	K-K1, L-L1	5 V.A	
	1.8KW x 8P	110%	1 SEC	1 SEC	11.0 A	12.1 A	CT-2	K-K1, L-L1	5 V.A	
C30 TON	17KW x 8P	110%	1 SEC	1 SEC	76.6 A	84.3 A	CT-2	K-K1, L-L1	5 V.A	
	1.8KW x 8P	110%	1 SEC	1 SEC	11.0 A	12.1 A	CT-2	K-K1, L-L1	5 V.A	
C35 TON	33KW x 6P	110%	1 SEC	1 SEC	126.6 A	139.3 A	CT-2	K-K1, L-L1	5 V.A	
	3.7KW x 4P	110%	1 SEC	1 SEC	16.0 A	17.6 A	CT-2	K-K1, L-L1	5 V.A	
C40 TON	33KW x 6P	110%	1 SEC	1 SEC	126.6 A	139.3 A	CT-2	K-K1, L-L1	5 V.A	
	3.7KW x 4P	110%	1 SEC	1 SEC	16.0 A	17.6 A	CT-2	K-K1, L-L1	5 V.A	
C50 TON	33KW x 6P	110%	1 SEC	1 SEC	126.6 A	139.3 A	CT-2	K-K1, L-L1	5 V.A	
	3.7KW x 4P	110%	1 SEC	1 SEC	16.0 A	17.6 A	CT-2	K-K1, L-L1	5 V.A	
C60 TON	33KW x 6P	110%	1 SEC	1 SEC	126.6 A	139.3 A	CT-2	K-K1, L-L1	5 V.A	
	3.7KW x 4P	110%	1 SEC	1 SEC	16.0 A	17.6 A	CT-2	K-K1, L-L1	5 V.A	
C70 TON	33KW x 6P	110%	1 SEC	1 SEC	126.6 A	139.3 A	CT-2	K-K1, L-L1	5 V.A	
	3.7KW x 4P	110%	1 SEC	1 SEC	16.0 A	17.6 A	CT-2	K-K1, L-L1	5 V.A	

NOTE

1. 상기 TABLE의 수치는 권고 SETTING 수치이며 MOTOR의 특성 및 현장 조건에 따라 변경 가능함.

불법복제 및 배포금지

192.168.11.51 / 2020-03-16 10:52:57

LOAD LIMITER 권고 SETTING치

* POWER SOURCE : AC 3Φ 380V 60Hz

극동호이스트(주)

HOIST	MOTOR 용량	LOAD LIMITER 권고 SETTING치			LOAD CURRENT		C.T MODEL	연결단자 NO	C.T 용량	REMARK
		LOAD CURRENT	ADJ START TIME	SHOCK TIME	100%	110%				
C15 TON	13KW x 8P	110%	1 SEC	1 SEC	34.2 A	37.6 A	CT-2	K-K1, L-L1	5 V.A	
	1.8KW x 8P	110%	1 SEC	1 SEC	6.4 A	7.0 A	CT-2	K-K1, L-L1	5 V.A	
C20 TON	17KW x 8P	110%	1 SEC	1 SEC	44.3 A	48.7 A	CT-2	K-K1, L-L1	5 V.A	
	1.8KW x 8P	110%	1 SEC	1 SEC	6.4 A	7.0 A	CT-2	K-K1, L-L1	5 V.A	
C30 TON	17KW x 8P	110%	1 SEC	1 SEC	44.3 A	48.7 A	CT-2	K-K1, L-L1	5 V.A	
	1.8KW x 8P	110%	1 SEC	1 SEC	6.4 A	7.0 A	CT-2	K-K1, L-L1	5 V.A	
C35 TON	33KW x 6P	110%	1 SEC	1 SEC	77.3 A	85.0 A	CT-2	K-K1, L-L1	5 V.A	
	3.7KW x 4P	110%	1 SEC	1 SEC	9.3 A	10.2 A	CT-2	K-K1, L-L1	5 V.A	
C40 TON	33KW x 6P	110%	1 SEC	1 SEC	77.3 A	85.0 A	CT-2	K-K1, L-L1	5 V.A	
	3.7KW x 4P	110%	1 SEC	1 SEC	9.3 A	10.2 A	CT-2	K-K1, L-L1	5 V.A	
C50 TON	33KW x 6P	110%	1 SEC	1 SEC	77.3 A	85.0 A	CT-2	K-K1, L-L1	5 V.A	
	3.7KW x 4P	110%	1 SEC	1 SEC	9.3 A	10.2 A	CT-2	K-K1, L-L1	5 V.A	
C60 TON	33KW x 6P	110%	1 SEC	1 SEC	77.3 A	85.0 A	CT-2	K-K1, L-L1	5 V.A	
	3.7KW x 4P	110%	1 SEC	1 SEC	9.3 A	10.2 A	CT-2	K-K1, L-L1	5 V.A	
C70 TON	33KW x 6P	110%	1 SEC	1 SEC	77.3 A	85.0 A	CT-2	K-K1, L-L1	5 V.A	
	3.7KW x 4P	110%	1 SEC	1 SEC	9.3 A	10.2 A	CT-2	K-K1, L-L1	5 V.A	

NOTE

1. 상기 TABLE의 수치는 권고 SETTING 수치이며 MOTOR의 특성 및 현장 조건에 따라 변경 가능함.

192.168.11.51 / 2020-03-16 10:52:57

불법복제 및 배포금지

LOAD LIMITER 권고 SETTING치

* POWER SOURCE : AC 3Φ 440V 60Hz

극동호이스트(주)

HOIST	MOTOR 용량	LOAD LIMITER 권고 SETTING치			LOAD CURRENT		C.T MODEL	연결단자 NO	C.T 용량	REMARK
		LOAD CURRENT	ADJ START TIME	SHOCK TIME	100%	110%				
C15 TON	13KW x 8P	110%	1 SEC	1 SEC	29.5 A	32.5 A	CT-2	K-K1, L-L1	5 V.A	
	1.8KW x 8P	110%	1 SEC	1 SEC	5.5 A	6.1 A	CT-2	K-K1, L-L1	5 V.A	
C20 TON	17KW x 8P	110%	1 SEC	1 SEC	38.3 A	42.1 A	CT-2	K-K1, L-L1	5 V.A	
	1.8KW x 8P	110%	1 SEC	1 SEC	5.5 A	6.1 A	CT-2	K-K1, L-L1	5 V.A	
C30 TON	17KW x 8P	110%	1 SEC	1 SEC	38.3 A	42.1 A	CT-2	K-K1, L-L1	5 V.A	
	1.8KW x 8P	110%	1 SEC	1 SEC	5.5 A	6.1 A	CT-2	K-K1, L-L1	5 V.A	
C35 TON	33KW x 6P	110%	1 SEC	1 SEC	63.3 A	69.6 A	CT-2	K-K1, L-L1	5 V.A	
	3.7KW x 4P	110%	1 SEC	1 SEC	8.0 A	8.8 A	CT-2	K-K1, L-L1	5 V.A	
C40 TON	33KW x 6P	110%	1 SEC	1 SEC	63.3 A	69.6 A	CT-2	K-K1, L-L1	5 V.A	
	3.7KW x 4P	110%	1 SEC	1 SEC	8.0 A	8.8 A	CT-2	K-K1, L-L1	5 V.A	
C50 TON	33KW x 6P	110%	1 SEC	1 SEC	63.3 A	69.6 A	CT-2	K-K1, L-L1	5 V.A	
	3.7KW x 4P	110%	1 SEC	1 SEC	8.0 A	8.8 A	CT-2	K-K1, L-L1	5 V.A	
C60 TON	33KW x 6P	110%	1 SEC	1 SEC	63.3 A	69.6 A	CT-2	K-K1, L-L1	5 V.A	
	3.7KW x 4P	110%	1 SEC	1 SEC	8.0 A	8.8 A	CT-2	K-K1, L-L1	5 V.A	
C70 TON	33KW x 6P	110%	1 SEC	1 SEC	63.3 A	69.6 A	CT-2	K-K1, L-L1	5 V.A	
	3.7KW x 4P	110%	1 SEC	1 SEC	8.0 A	8.8 A	CT-2	K-K1, L-L1	5 V.A	

NOTE

1. 상기 TABLE의 수치는 권고 SETTING 수치이며 MOTOR의 특성 및 현장 조건에 따라 변경 가능함.

불법복제 및 배포금지

192.168.11.51 / 2020-03-16 10:52:57

LOAD LIMITER 권고 SETTING치

* POWER SOURCE : AC 3¢ 460V 60Hz

극동호이스트(주)

HOIST	MOTOR 용량	LOAD LIMITER 권고 SETTING치			LOAD CURRENT		C.T MODEL	연결단자 NO	C.T 용량	REMARK
		LOAD CURRENT	ADJ START TIME	SHOCK TIME	100%	110%				
C15 TON	13KW x 8P	110%	1 SEC	1 SEC	28.4 A	31.2 A	CT-2	K-K1, L-L1	5 V.A	
	1.8KW x 8P	110%	1 SEC	1 SEC	5.3 A	5.8 A	CT-2	K-K1, L-L1	5 V.A	
C20 TON	17KW x 8P	110%	1 SEC	1 SEC	36.7 A	40.4 A	CT-2	K-K1, L-L1	5 V.A	
	1.8KW x 8P	110%	1 SEC	1 SEC	5.3 A	5.8 A	CT-2	K-K1, L-L1	5 V.A	
C30 TON	17KW x 8P	110%	1 SEC	1 SEC	36.7 A	40.4 A	CT-2	K-K1, L-L1	5 V.A	
	1.8KW x 8P	110%	1 SEC	1 SEC	5.3 A	5.8 A	CT-2	K-K1, L-L1	5 V.A	
C35 TON	33KW x 6P	110%	1 SEC	1 SEC	60.5 A	66.6 A	CT-2	K-K1, L-L1	5 V.A	
	3.7KW x 4P	110%	1 SEC	1 SEC	7.7 A	8.5 A	CT-2	K-K1, L-L1	5 V.A	
C40 TON	33KW x 6P	110%	1 SEC	1 SEC	60.5 A	66.6 A	CT-2	K-K1, L-L1	5 V.A	
	3.7KW x 4P	110%	1 SEC	1 SEC	7.7 A	8.5 A	CT-2	K-K1, L-L1	5 V.A	
C50 TON	33KW x 6P	110%	1 SEC	1 SEC	60.5 A	66.6 A	CT-2	K-K1, L-L1	5 V.A	
	3.7KW x 4P	110%	1 SEC	1 SEC	7.7 A	8.5 A	CT-2	K-K1, L-L1	5 V.A	
C60 TON	33KW x 6P	110%	1 SEC	1 SEC	60.5 A	66.6 A	CT-2	K-K1, L-L1	5 V.A	
	3.7KW x 4P	110%	1 SEC	1 SEC	7.7 A	8.5 A	CT-2	K-K1, L-L1	5 V.A	
C70 TON	33KW x 6P	110%	1 SEC	1 SEC	60.5 A	66.6 A	CT-2	K-K1, L-L1	5 V.A	
	3.7KW x 4P	110%	1 SEC	1 SEC	7.7 A	8.5 A	CT-2	K-K1, L-L1	5 V.A	

NOTE

1. 상기 TABLE의 수치는 권고 SETTING 수치이며 MOTOR의 특성 및 현장 조건에 따라 변경 가능함.

불법복제 및 배포금지

192.168.11.51 / 2020-03-16 10:52:57

LOAD LIMITER 권고 SETTING치

* POWER SOURCE : AC 3¢ 480V 60Hz

극동호이스트(주)

HOIST	MOTOR 용량	LOAD LIMITER 권고 SETTING치			LOAD CURRENT		C.T MODEL	연결단자 NO	C.T 용량	REMARK
		LOAD CURRENT	ADJ START TIME	SHOCK TIME	100%	110%				
C15 TON	13KW x 8P	110%	1 SEC	1 SEC	27.2 A	29.9 A	CT-2	K-K1, L-L1	5 V.A	
	1.8KW x 8P	110%	1 SEC	1 SEC	5.1 A	5.6 A	CT-2	K-K1, L-L1	5 V.A	
C20 TON	17KW x 8P	110%	1 SEC	1 SEC	35.2 A	38.7 A	CT-2	K-K1, L-L1	5 V.A	
	1.8KW x 8P	110%	1 SEC	1 SEC	5.1 A	5.6 A	CT-2	K-K1, L-L1	5 V.A	
C30 TON	17KW x 8P	110%	1 SEC	1 SEC	35.2 A	38.7 A	CT-2	K-K1, L-L1	5 V.A	
	1.8KW x 8P	110%	1 SEC	1 SEC	5.1 A	5.6 A	CT-2	K-K1, L-L1	5 V.A	
C35 TON	33KW x 6P	110%	1 SEC	1 SEC	58.0 A	63.8 A	CT-2	K-K1, L-L1	5 V.A	
	3.7KW x 4P	110%	1 SEC	1 SEC	7.3 A	8.0 A	CT-2	K-K1, L-L1	5 V.A	
C40 TON	33KW x 6P	110%	1 SEC	1 SEC	58.0 A	63.8 A	CT-2	K-K1, L-L1	5 V.A	
	3.7KW x 4P	110%	1 SEC	1 SEC	7.3 A	8.0 A	CT-2	K-K1, L-L1	5 V.A	
C50 TON	33KW x 6P	110%	1 SEC	1 SEC	58.0 A	63.8 A	CT-2	K-K1, L-L1	5 V.A	
	3.7KW x 4P	110%	1 SEC	1 SEC	7.3 A	8.0 A	CT-2	K-K1, L-L1	5 V.A	
C60 TON	33KW x 6P	110%	1 SEC	1 SEC	58.0 A	63.8 A	CT-2	K-K1, L-L1	5 V.A	
	3.7KW x 4P	110%	1 SEC	1 SEC	7.3 A	8.0 A	CT-2	K-K1, L-L1	5 V.A	
C70 TON	33KW x 6P	110%	1 SEC	1 SEC	58.0 A	63.8 A	CT-2	K-K1, L-L1	5 V.A	
	3.7KW x 4P	110%	1 SEC	1 SEC	7.3 A	8.0 A	CT-2	K-K1, L-L1	5 V.A	

NOTE

1. 상기 TABLE의 수치는 권고 SETTING 수치이며 MOTOR의 특성 및 현장 조건에 따라 변경 가능함.

불법복제 및 배포금지

192.168.11.51 / 2020-03-16 10:52:57

E.O.C.R 권고 SETTING치

* POWER SOURCE : AC 3¢ 220V 60Hz

극동호이스트(주)

HOIST	MOTOR 용량	MOTOR 정격 전류	DRIVE TYPE	E.O.C.R TYPE	권고 SETTING 치			REMARK
					DELAY TIME	OPERATION TIME	CURRENT	
C1 TON	2.4KW x 4P	10.0 A	1 DRAVE	SS-30	3 SEC	1 SEC	11.0 A	
	0.4KW x 4P	2.7 A	1 DRAVE	SS-05	3 SEC	1 SEC	3.0 A	
C2 TON	3.7KW x 4P	16.0 A	1 DRAVE	SS-30	3 SEC	1 SEC	17.6 A	
	0.4KW x 4P	2.7 A	1 DRAVE	SS-05	3 SEC	1 SEC	3.0 A	
C2.8 TON	5.0KW x 4P	22.8 A	1 DRAVE	SS-30	3 SEC	1 SEC	25.1 A	
	1.5KW x 4P	7.3 A	1 DRAVE	SS-30	3 SEC	1 SEC	8.0 A	
C3 TON	5.5KW x 4P	22.8 A	1 DRAVE	SS-30	3 SEC	1 SEC	25.1 A	
	1.5KW x 4P	7.3 A	1 DRAVE	SS-30	3 SEC	1 SEC	8.0 A	
C5 TON	5.5KW x 6P	28.2 A	1 DRAVE	SS-30	3 SEC	1 SEC	31.0 A	
	1.0KW x 6P	6.7 A	1 DRAVE	SS-30	3 SEC	1 SEC	7.4 A	
C7.5 TON	5.5KW x 6P	28.2 A	1 DRAVE	SS-30	3 SEC	1 SEC	31.0 A	
	1.0KW x 6P	6.7 A	1 DRAVE	SS-30	3 SEC	1 SEC	7.4 A	
C10 TON	9.0KW x 8P	45.0 A	1 DRAVE	SS-60	3 SEC	1 SEC	49.5 A	
	1.1KW x 8P	8.0 A	1 DRAVE	SS-30	3 SEC	1 SEC	8.7 A	

NOTE

1. 상기 TABLE의 수치는 권고 SETTING 수치이며 MOTOR의 특성 및 현장 조건에 따라 변경 가능함.

불법복제 및 배포금지

192.168.11.51 / 2020-03-16 10:52:57

E.O.C.R 권고 SETTING치

* POWER SOURCE : AC 3¢ 380V 60Hz

극동호이스트(주)

HOIST	MOTOR 용량	MOTOR 정격 전류	DRIVE TYPE	E.O.C.R TYPE	권고 SETTING 치			REMARK
					DELAY TIME	OPERATION TIME	CURRENT	
C1 TON	2.4KW x 4P	5.8 A	1 DRAVE	SS-30	3 SEC	1 SEC	6.4 A	
	0.4KW x 4P	1.6 A	1 DRAVE	SS-05	3 SEC	1 SEC	1.8 A	
C2 TON	3.7KW x 4P	9.3 A	1 DRAVE	SS-30	3 SEC	1 SEC	10.2 A	
	0.4KW x 4P	1.6 A	1 DRAVE	SS-05	3 SEC	1 SEC	1.8 A	
C2.8 TON	5.0KW x 4P	12.2 A	1 DRAVE	SS-30	3 SEC	1 SEC	13.4 A	
	1.5KW x 4P	4.2 A	1 DRAVE	SS-05	3 SEC	1 SEC	4.6 A	
C3 TON	5.5KW x 4P	12.2 A	1 DRAVE	SS-30	3 SEC	1 SEC	13.4 A	
	1.5KW x 4P	4.2 A	1 DRAVE	SS-05	3 SEC	1 SEC	4.6 A	
C5 TON	5.5KW x 6P	16.3 A	1 DRAVE	SS-30	3 SEC	1 SEC	17.9 A	
	1.0KW x 6P	3.9 A	1 DRAVE	SS-05	3 SEC	1 SEC	4.3 A	
C7.5 TON	5.5KW x 6P	16.3 A	1 DRAVE	SS-30	3 SEC	1 SEC	17.9 A	
	1.0KW x 6P	3.9 A	1 DRAVE	SS-05	3 SEC	1 SEC	4.3 A	
C10 TON	9.0KW x 8P	26.0 A	1 DRAVE	SS-30	3 SEC	1 SEC	28.6 A	
	1.1KW x 8P	4.6 A	1 DRAVE	SS-05	3 SEC	1 SEC	5.0 A	

NOTE

1. 상기 TABLE의 수치는 권고 SETTING 수치이며 MOTOR의 특성 및 현장 조건에 따라 변경 가능함.

192.168.11.51 / 2020-03-16 10:52:57

불법복제 및 배포금지

E.O.C.R 권고 SETTING치

* POWER SOURCE : AC 3¢ 440V 60Hz

극동호이스트(주)

HOIST	MOTOR 용량	MOTOR 정격 전류	DRIVE TYPE	E.O.C.R TYPE	권고 SETTING 치			REMARK
					DELAY TIME	OPERATION TIME	CURRENT	
C1 TON	2.4KW x 4P	5.0 A	1 DRAVE	SS-30	3 SEC	1 SEC	5.5 A	
	0.4KW x 4P	1.4 A	1 DRAVE	SS-05	3 SEC	1 SEC	1.5 A	
C2 TON	3.7KW x 4P	8.0 A	1 DRAVE	SS-30	3 SEC	1 SEC	8.8 A	
	0.4KW x 4P	1.4 A	1 DRAVE	SS-05	3 SEC	1 SEC	1.5 A	
C2.8 TON	5.0KW x 4P	10.5 A	1 DRAVE	SS-30	3 SEC	1 SEC	11.6 A	
	1.5KW x 4P	3.7 A	1 DRAVE	SS-05	3 SEC	1 SEC	4.1 A	
C3 TON	5.5KW x 4P	10.5 A	1 DRAVE	SS-30	3 SEC	1 SEC	11.6 A	
	1.5KW x 4P	3.7 A	1 DRAVE	SS-05	3 SEC	1 SEC	4.1 A	
C5 TON	5.5KW x 6P	14.1 A	1 DRAVE	SS-30	3 SEC	1 SEC	15.5 A	
	1.0KW x 6P	3.3 A	1 DRAVE	SS-05	3 SEC	1 SEC	3.6 A	
C7.5 TON	5.5KW x 6P	14.1 A	1 DRAVE	SS-30	3 SEC	1 SEC	15.5 A	
	1.0KW x 6P	3.3 A	1 DRAVE	SS-05	3 SEC	1 SEC	3.6 A	
C10 TON	9.0KW x 8P	22.5 A	1 DRAVE	SS-30	3 SEC	1 SEC	24.8 A	
	1.1KW x 8P	4.0 A	1 DRAVE	SS-05	3 SEC	1 SEC	4.3 A	

NOTE

1. 상기 TABLE의 수치는 권고 SETTING 수치이며 MOTOR의 특성 및 현장 조건에 따라 변경 가능함.

불법복제 및 배포금지

192.168.11.51 / 2020-03-16 10:52:57

E.O.C.R 권고 SETTING치

* POWER SOURCE : AC 3¢ 460V 60Hz

극동호이스트(주)

HOIST	MOTOR 용량	MOTOR 정격 전류	DRIVE TYPE	E.O.C.R TYPE	권고 SETTING 치			REMARK
					DELAY TIME	OPERATION TIME	CURRENT	
C1 TON	2.4KW x 4P	4.8 A	1 DRAVE	SS-30	3 SEC	1 SEC	5.3 A	
	0.4KW x 4P	1.4 A	1 DRAVE	SS-05	3 SEC	1 SEC	1.5 A	
C2 TON	3.7KW x 4P	7.7 A	1 DRAVE	SS-30	3 SEC	1 SEC	8.5 A	
	0.4KW x 4P	1.4 A	1 DRAVE	SS-05	3 SEC	1 SEC	1.5 A	
C2.8 TON	5.0KW x 4P	10.0 A	1 DRAVE	SS-30	3 SEC	1 SEC	11.0 A	
	1.5KW x 4P	3.5 A	1 DRAVE	SS-05	3 SEC	1 SEC	3.9 A	
C3 TON	5.5KW x 4P	10.0 A	1 DRAVE	SS-30	3 SEC	1 SEC	11.0 A	
	1.5KW x 4P	3.5 A	1 DRAVE	SS-05	3 SEC	1 SEC	3.9 A	
C5 TON	5.5KW x 6P	13.5 A	1 DRAVE	SS-30	3 SEC	1 SEC	14.9 A	
	1.0KW x 6P	3.2 A	1 DRAVE	SS-05	3 SEC	1 SEC	3.5 A	
C7.5 TON	5.5KW x 6P	13.5 A	1 DRAVE	SS-30	3 SEC	1 SEC	14.9 A	
	1.0KW x 6P	3.2 A	1 DRAVE	SS-05	3 SEC	1 SEC	3.5 A	
C10 TON	9.0KW x 8P	21.5 A	1 DRAVE	SS-30	3 SEC	1 SEC	23.7 A	
	1.1KW x 8P	3.7 A	1 DRAVE	SS-05	3 SEC	1 SEC	4.1 A	

NOTE

1. 상기 TABLE의 수치는 권고 SETTING 수치이며 MOTOR의 특성 및 현장 조건에 따라 변경 가능함.

192.168.11.51 / 2020-03-16 10:52:57

불법복제 및 배포금지

E.O.C.R 권고 SETTING치

* POWER SOURCE : AC 3¢ 480V 60Hz

극동호이스트(주)

HOIST	MOTOR 용량	MOTOR 정격 전류	DRIVE TYPE	E.O.C.R TYPE	권고 SETTING 치			REMARK
					DELAY TIME	OPERATION TIME	CURRENT	
C1 TON	2.4KW x 4P	4.6 A	1 DRAVE	SS-30	3 SEC	1 SEC	5.1 A	
	0.4KW x 4P	1.4 A	1 DRAVE	SS-05	3 SEC	1 SEC	1.5 A	
C2 TON	3.7KW x 4P	7.3 A	1 DRAVE	SS-30	3 SEC	1 SEC	8.0 A	
	0.4KW x 4P	1.4 A	1 DRAVE	SS-05	3 SEC	1 SEC	1.5 A	
C2.8 TON	5.0KW x 4P	9.6 A	1 DRAVE	SS-30	3 SEC	1 SEC	10.6 A	
	1.5KW x 4P	3.4 A	1 DRAVE	SS-05	3 SEC	1 SEC	3.7 A	
C3 TON	5.5KW x 4P	9.6 A	1 DRAVE	SS-30	3 SEC	1 SEC	10.6 A	
	1.5KW x 4P	3.4 A	1 DRAVE	SS-05	3 SEC	1 SEC	3.7 A	
C5 TON	5.5KW x 6P	12.9 A	1 DRAVE	SS-30	3 SEC	1 SEC	14.2 A	
	1.0KW x 6P	3.1 A	1 DRAVE	SS-05	3 SEC	1 SEC	3.4 A	
C7.5 TON	5.5KW x 6P	12.9 A	1 DRAVE	SS-30	3 SEC	1 SEC	14.2 A	
	1.0KW x 6P	3.1 A	1 DRAVE	SS-05	3 SEC	1 SEC	3.4 A	
C10 TON	9.0KW x 8P	20.6 A	1 DRAVE	SS-30	3 SEC	1 SEC	22.7 A	
	1.1KW x 8P	3.6 A	1 DRAVE	SS-05	3 SEC	1 SEC	4.0 A	

NOTE

1. 상기 TABLE의 수치는 권고 SETTING 수치이며 MOTOR의 특성 및 현장 조건에 따라 변경 가능함.

불법복제 및 배포금지

192.168.11.51 / 2020-03-16 10:52:57

LOAD LIMITER 권고 SETTING치

* POWER SOURCE : AC 3¢ 220V 60Hz

극동호이스트(주)

HOIST	MOTOR 용량	LOAD LIMITER 권고 SETTING치			LOAD CURRENT		C.T MODEL	연결단자 NO	C.T 용량	REMARK
		LOAD CURRENT	ADJ START TIME	SHOCK TIME	100%	110%				
C1 TON	2.4KW x 4P	110%	1 SEC	1 SEC	10 A	11.2 A	CT-2	K-K1, L-L1	5 V.A	
	0.4KW x 4P	110%	1 SEC	1 SEC	2.7 A	3.1 A	CT-1	K-K1, L-L1	5 V.A	
C2 TON	3.7KW x 4P	110%	1 SEC	1 SEC	16.0 A	17.4 A	CT-2	K-K1, L-L1	5 V.A	
	0.4KW x 4P	110%	1 SEC	1 SEC	2.7 A	3.1 A	CT-1	K-K1, L-L1	5 V.A	
C2.8 TON	5.0KW x 4P	110%	1 SEC	1 SEC	22.8 A	24.2 A	CT-2	K-K1, L-L1	5 V.A	
	1.5KW x 4P	110%	1 SEC	1 SEC	7.3 A	8.3 A	CT-1	K-K1, L-L1	5 V.A	
C3 TON	5.5KW x 4P	110%	1 SEC	1 SEC	22.8 A	24.3 A	CT-2	K-K1, L-L1	5 V.A	
	1.5KW x 4P	110%	1 SEC	1 SEC	7.3 A	8.3 A	CT-1	K-K1, L-L1	5 V.A	
C5 TON	5.5KW x 6P	110%	1 SEC	1 SEC	28.2 A	30.1 A	CT-2	K-K1, L-L1	5 V.A	
	1.0KW x 6P	110%	1 SEC	1 SEC	6.7 A	8.1 A	CT-1	K-K1, L-L1	5 V.A	
C7.5 TON	5.5KW x 6P	110%	1 SEC	1 SEC	28.2 A	30.1 A	CT-2	K-K1, L-L1	5 V.A	
	1.0KW x 6P	110%	1 SEC	1 SEC	6.7 A	8.1 A	CT-1	K-K1, L-L1	5 V.A	
C10 TON	9.0KW x 8P	110%	1 SEC	1 SEC	45.0 A	49.1 A	CT-2	K-K1, L-L1	5 V.A	
	1.1KW x 8P	110%	1 SEC	1 SEC	7.95A	8.7 A	CT-2	K-K1, L-L1	5 V.A	

NOTE

1. 상기 TABLE의 수치는 권고 SETTING 수치이며 MOTOR의 특성 및 현장 조건에 따라 변경 가능함.

192.168.11.51 / 2020-03-16 10:52:57

불법복제 및 배포금지

LOAD LIMITER 권고 SETTING치

* POWER SOURCE : AC 3¢ 380V 60Hz

극동호이스트(주)

HOIST	MOTOR 용량	LOAD LIMITER 권고 SETTING치			LOAD CURRENT		C.T MODEL	연결단자 NO	C.T 용량	REMARK
		LOAD CURRENT	ADJ START TIME	SHOCK TIME	100%	110%				
C1 TON	2.4KW x 4P	110%	1 SEC	1 SEC	5.8 A	6.3 A	CT-2	K-K1, L-L1	5 V.A	
	0.4KW x 4P	110%	1 SEC	1 SEC	1.6 A	2.1 A	CT-1	K-K1, L-L1	5 V.A	
C2 TON	3.7KW x 4P	110%	1 SEC	1 SEC	9.3 A	11.3 A	CT-2	K-K1, L-L1	5 V.A	
	0.4KW x 4P	110%	1 SEC	1 SEC	1.6 A	2.1 A	CT-1	K-K1, L-L1	5 V.A	
C2.8 TON	5.0KW x 4P	110%	1 SEC	1 SEC	12.2 A	13.6 A	CT-2	K-K1, L-L1	5 V.A	
	1.5KW x 4P	110%	1 SEC	1 SEC	4.2 A	5.4 A	CT-1	K-K1, L-L1	5 V.A	
C3 TON	5.5KW x 4P	110%	1 SEC	1 SEC	12.2 A	13.6 A	CT-2	K-K1, L-L1	5 V.A	
	1.5KW x 4P	110%	1 SEC	1 SEC	4.2 A	5.4 A	CT-1	K-K1, L-L1	5 V.A	
C5 TON	5.5KW x 6P	110%	1 SEC	1 SEC	16.3 A	17.8 A	CT-2	K-K1, L-L1	5 V.A	
	1.0KW x 6P	110%	1 SEC	1 SEC	3.9 A	5.3 A	CT-1	K-K1, L-L1	5 V.A	
C7.5 TON	5.5KW x 6P	110%	1 SEC	1 SEC	16.3 A	17.8 A	CT-2	K-K1, L-L1	5 V.A	
	1.0KW x 6P	110%	1 SEC	1 SEC	3.9 A	5.3 A	CT-1	K-K1, L-L1	5 V.A	
C10 TON	9.0KW x 8P	110%	1 SEC	1 SEC	26.0 A	28.6 A	CT-2	K-K1, L-L1	5 V.A	
	1.1KW x 8P	110%	1 SEC	1 SEC	4.6 A	5.1 A	CT-2	K-K1, L-L1	5 V.A	

NOTE

1. 상기 TABLE의 수치는 권고 SETTING 수치이며 MOTOR의 특성 및 현장 조건에 따라 변경 가능함.

192.168.11.51 / 2020-03-16 10:52:57

불법복제 및 배포금지

LOAD LIMITER 권고 SETTING치

* POWER SOURCE : AC 3¢ 440V 60Hz

극동호이스트(주)

HOIST	MOTOR 용량	LOAD LIMITER 권고 SETTING치			LOAD CURRENT		C.T MODEL	연결단자 NO	C.T 용량	REMARK
		LOAD CURRENT	ADJ START TIME	SHOCK TIME	100%	110%				
C1 TON	2.4KW x 4P	110%	1 SEC	1 SEC	5.0 A	7.3 A	CT-2	K-K1, L-L1	5 V.A	
	0.4KW x 4P	110%	1 SEC	1 SEC	1.4 A	1.8 A	CT-1	K-K1, L-L1	5 V.A	
C2 TON	3.7KW x 4P	110%	1 SEC	1 SEC	8.0 A	10.8 A	CT-2	K-K1, L-L1	5 V.A	
	0.4KW x 4P	110%	1 SEC	1 SEC	1.4 A	1.8 A	CT-1	K-K1, L-L1	5 V.A	
C2.8 TON	5.0KW x 4P	110%	1 SEC	1 SEC	10.5 A	13.7 A	CT-2	K-K1, L-L1	5 V.A	
	1.5KW x 4P	110%	1 SEC	1 SEC	3.7 A	4.3 A	CT-1	K-K1, L-L1	5 V.A	
C3 TON	5.5KW x 4P	110%	1 SEC	1 SEC	10.5 A	13.7 A	CT-2	K-K1, L-L1	5 V.A	
	1.5KW x 4P	110%	1 SEC	1 SEC	3.7 A	4.3 A	CT-1	K-K1, L-L1	5 V.A	
C5 TON	5.5KW x 6P	110%	1 SEC	1 SEC	14.1 A	18.5 A	CT-2	K-K1, L-L1	5 V.A	
	1.0KW x 6P	110%	1 SEC	1 SEC	3.3 A	4.7 A	CT-1	K-K1, L-L1	5 V.A	
C7.5 TON	5.5KW x 6P	110%	1 SEC	1 SEC	14.1 A	18.5 A	CT-2	K-K1, L-L1	5 V.A	
	1.0KW x 6P	110%	1 SEC	1 SEC	3.3 A	4.7 A	CT-1	K-K1, L-L1	5 V.A	
C10 TON	9.0KW x 8P	110%	1 SEC	1 SEC	22.5 A	24.8 A	CT-2	K-K1, L-L1	5 V.A	
	1.1KW x 8P	110%	1 SEC	1 SEC	4.0 A	4.4 A	CT-1	K-K1, L-L1	5 V.A	

NOTE

1. 상기 TABLE의 수치는 권고 SETTING 수치이며 MOTOR의 특성 및 현장 조건에 따라 변경 가능함.

192.168.11.51 / 2020-03-16 10:52:57

불법복제 및 배포금지

LOAD LIMITER 권고 SETTING치

* POWER SOURCE : AC 3¢ 460V 60Hz

극동호이스트(주)

HOIST	MOTOR 용량	LOAD LIMITER 권고 SETTING치			LOAD CURRENT		C.T MODEL	연결단자 NO	C.T 용량	REMARK
		LOAD CURRENT	ADJ START TIME	SHOCK TIME	100%	110%				
C1 TON	2.4KW x 4P	110%	1 SEC	1 SEC	4.8 A	5.2 A	CT-2	K-K1, L-L1	5 V.A	
	0.4KW x 4P	110%	1 SEC	1 SEC	1.3 A	1.5 A	CT-1	K-K1, L-L1	5 V.A	
C2 TON	3.7KW x 4P	110%	1 SEC	1 SEC	7.7 A	8.5 A	CT-2	K-K1, L-L1	5 V.A	
	0.4KW x 4P	110%	1 SEC	1 SEC	1.3 A	1.5 A	CT-1	K-K1, L-L1	5 V.A	
C2.8 TON	5.0KW x 4P	110%	1 SEC	1 SEC	10.0 A	11.5 A	CT-2	K-K1, L-L1	5 V.A	
	1.5KW x 4P	110%	1 SEC	1 SEC	3.5 A	4.3 A	CT-1	K-K1, L-L1	5 V.A	
C3 TON	5.5KW x 4P	110%	1 SEC	1 SEC	10.0 A	11.5 A	CT-2	K-K1, L-L1	5 V.A	
	1.5KW x 4P	110%	1 SEC	1 SEC	3.5 A	4.3 A	CT-1	K-K1, L-L1	5 V.A	
C5 TON	5.5KW x 6P	110%	1 SEC	1 SEC	13.5 A	14.7 A	CT-2	K-K1, L-L1	5 V.A	
	1.0KW x 6P	110%	1 SEC	1 SEC	3.2 A	3.6 A	CT-1	K-K1, L-L1	5 V.A	
C7.5 TON	5.5KW x 6P	110%	1 SEC	1 SEC	13.5 A	14.7 A	CT-2	K-K1, L-L1	5 V.A	
	1.0KW x 6P	110%	1 SEC	1 SEC	3.2 A	3.6 A	CT-1	K-K1, L-L1	5 V.A	
C10 TON	9.0KW x 8P	110%	1 SEC	1 SEC	21.5 A	23.7 A	CT-2	K-K1, L-L1	5 V.A	
	1.1KW x 8P	110%	1 SEC	1 SEC	3.7 A	4.1 A	CT-1	K-K1, L-L1	5 V.A	

NOTE

1. 상기 TABLE의 수치는 권고 SETTING 수치이며 MOTOR의 특성 및 현장 조건에 따라 변경 가능함.

192.168.11.51 / 2020-03-16 10:52:57

불법복제 및 배포금지

LOAD LIMITER 권고 SETTING치

* POWER SOURCE : AC 3¢ 480V 60Hz

극동호이스트(주)

HOIST	MOTOR 용량	LOAD LIMITER 권고 SETTING치			LOAD CURRENT		C.T MODEL	연결단자 NO	C.T 용량	REMARK
		LOAD CURRENT	ADJ START TIME	SHOCK TIME	100%	110%				
C1 TON	2.4KW x 4P	110%	1 SEC	1 SEC	4.6 A	5.0 A	CT-2	K-K1, L-L1	5 V.A	
	0.4KW x 4P	110%	1 SEC	1 SEC	1.2 A	1.35 A	CT-1	K-K1, L-L1	5 V.A	
C2 TON	3.7KW x 4P	110%	1 SEC	1 SEC	7.3 A	8.2 A	CT-2	K-K1, L-L1	5 V.A	
	0.4KW x 4P	110%	1 SEC	1 SEC	1.2 A	1.35 A	CT-1	K-K1, L-L1	5 V.A	
C2.8 TON	5.0KW x 4P	110%	1 SEC	1 SEC	9.6 A	11.2 A	CT-2	K-K1, L-L1	5 V.A	
	1.5KW x 4P	110%	1 SEC	1 SEC	3.4 A	4.3 A	CT-1	K-K1, L-L1	5 V.A	
C3 TON	5.5KW x 4P	110%	1 SEC	1 SEC	9.6 A	11.2 A	CT-2	K-K1, L-L1	5 V.A	
	1.5KW x 4P	110%	1 SEC	1 SEC	3.4 A	4.3 A	CT-1	K-K1, L-L1	5 V.A	
C5 TON	5.5KW x 6P	110%	1 SEC	1 SEC	12.9 A	14.2 A	CT-2	K-K1, L-L1	5 V.A	
	1.0KW x 6P	110%	1 SEC	1 SEC	3.1 A	3.5 A	CT-1	K-K1, L-L1	5 V.A	
C7.5 TON	5.5KW x 6P	110%	1 SEC	1 SEC	12.9 A	14.2 A	CT-2	K-K1, L-L1	5 V.A	
	1.0KW x 6P	110%	1 SEC	1 SEC	3.1 A	3.5 A	CT-1	K-K1, L-L1	5 V.A	
C10 TON	9.0KW x 8P	110%	1 SEC	1 SEC	20.6 A	22.7 A	CT-2	K-K1, L-L1	5 V.A	
	1.1KW x 8P	110%	1 SEC	1 SEC	3.6 A	4.0 A	CT-1	K-K1, L-L1	5 V.A	

NOTE

1. 상기 TABLE의 수치는 권고 SETTING 수치이며 MOTOR의 특성 및 현장 조건에 따라 변경 가능함.

불법복제 및 배포금지

192.168.11.51 / 2020-03-16 10:52:57

E.O.C.R 권고 SETTING 치

* POWER SOURCE : AC3¢ 220V 60Hz

극동호이스트(주)

MOTOR 용량	MOTOR 정격 전류	DRIVE TYPE	E.O.C.R TYPE	권고 SETTING 치			REMARK
				DELAY TIME	OPERATION TIME	CURRENT	
0.2KW x 6P	2.1 A	1 DRIVE	SS - 05	3 SEC	1 SEC	2.3 A	
		2DRIVE	SS - 05	3 SEC	1 SEC	4.6 A	
0.4KW x 4P	2.7 A	1 DRIVE	SS - 05	3 SEC	1 SEC	3.0 A	
		2DRIVE	SS - 30	3 SEC	1 SEC	5.9 A	
0.5KW x 6P	3.5 A	1 DRIVE	SS - 05	3 SEC	1 SEC	3.9 A	
		2DRIVE	SS - 30	3 SEC	1 SEC	7.7 A	
0.75KW x 4P	4.1 A	1 DRIVE	SS - 05	3 SEC	1 SEC	4.5 A	
		2DRIVE	SS - 30	3 SEC	1 SEC	9.0 A	
1.0KW x 6P	6.8 A	1 DRIVE	SS - 30	3 SEC	1 SEC	7.5 A	
		2DRIVE	SS - 30	3 SEC	1 SEC	15.0 A	
1.5KW x 4P	7.4 A	1 DRIVE	SS - 30	3 SEC	1 SEC	8.1 A	
		2DRIVE	SS - 30	3 SEC	1 SEC	16.3 A	
1.5KW x 6P	7.6 A	1 DRIVE	SS - 30	3 SEC	1 SEC	8.4 A	
		2DRIVE	SS - 30	3 SEC	1 SEC	16.7 A	
2.2KW x 4P	10.0 A	1 DRIVE	SS - 30	3 SEC	1 SEC	11.0 A	
		2 DRIVE	SS - 30	3 SEC	1 SEC	22.0 A	
0.8/0.4KW x 4/8P	4.8/4.25 A	1 DRIVE	SS - 30	3 SEC	1 SEC	5.3 A	
			SS - 05	3 SEC	1 SEC	4.7 A	
		2 DRIVE	SS - 30	3 SEC	1 SEC	10.6 A	
			SS - 30	3 SEC	1 SEC	9.4 A	
2.2KW x 6P	12.0 A	1 DRIVE	SS - 30	3 SEC	1 SEC	13.2 A	
		2DRIVE	SS - 30	3 SEC	1 SEC	26.4 A	
3.7KW x 4P	16.0 A	1 DRIVE	SS - 30	3 SEC	1 SEC	17.6 A	
		2DRIVE	SS - 60	3 SEC	1 SEC	35.2 A	

NOTE

1, 상기 TABLE의 수치는 권고 SETTING 수치이며 MOTOR의 특성 및 현장 조건에 따라 변경 가능함.

192.168.11.51 / 2020-03-16 10:52:57

불법복제 및 배포금지

E.O.C.R 권고 SETTING 치

* POWER SOURCE : AC3¢ 380V 60Hz

극동호이스트(주)

MOTOR 용량	MOTOR 정격 전류	DRIVE TYPE	E.O.C.R TYPE	권고 SETTING 치			REMARK
				DELAY TIME	OPERATION TIME	CURRENT	
0.2KW x 6P	1.6 A	1 DRIVE	SS - 05	3 SEC	1 SEC	1.8 A	
		2DRIVE	SS - 05	3 SEC	1 SEC	3.5 A	
0.4KW x 4P	1.8 A	1 DRIVE	SS - 05	3 SEC	1 SEC	2.0 A	
		2DRIVE	SS - 05	3 SEC	1 SEC	4.0 A	
0.5KW x 6P	2.0 A	1 DRIVE	SS - 05	3 SEC	1 SEC	2.2 A	
		2DRIVE	SS - 05	3 SEC	1 SEC	4.4 A	
0.75KW x 4P	2.4 A	1 DRIVE	SS - 05	3 SEC	1 SEC	2.6 A	
		2DRIVE	SS - 30	3 SEC	1 SEC	5.3 A	
1.0KW x 6P	3.9 A	1 DRIVE	SS - 05	3 SEC	1 SEC	4.3 A	
		2DRIVE	SS - 30	3 SEC	1 SEC	8.6 A	
1.5KW x 4P	4.3 A	1 DRIVE	SS - 05	3 SEC	1 SEC	4.7 A	
		2DRIVE	SS - 30	3 SEC	1 SEC	9.5 A	
1.5KW x 6P	4.4 A	1 DRIVE	SS - 05	3 SEC	1 SEC	4.8 A	
		2DRIVE	SS - 30	3 SEC	1 SEC	9.7 A	
2.2KW x 4P	5.8 A	1 DRIVE	SS - 30	3 SEC	1 SEC	6.4 A	
		2 DRIVE	SS - 30	3 SEC	1 SEC	12.8 A	
0.8/0.4KW x 4/8P	2.78/2.63 A	1 DRIVE	SS - 05	3 SEC	1 SEC	3.1 A	
			SS - 05	3 SEC	1 SEC	2.9 A	
		2 DRIVE	SS - 30	3 SEC	1 SEC	6.1 A	
			SS - 30	3 SEC	1 SEC	5.8 A	
2.2KW x 6P	7.0 A	1 DRIVE	SS - 30	3 SEC	1 SEC	7.7 A	
		2DRIVE	SS - 30	3 SEC	1 SEC	15.4 A	
3.7KW x 4P	9.3 A	1 DRIVE	SS - 30	3 SEC	1 SEC	10.2 A	
		2DRIVE	SS - 30	3 SEC	1 SEC	20.5 A	

NOTE

1, 상기 TABLE의 수치는 권고 SETTING 수치이며 MOTOR의 특성 및 현장 조건에 따라 변경 가능함.

192.168.11.51 / 2020-03-16 10:52:57

불법복제 및 배포금지

E.O.C.R 권고 SETTING 치

* POWER SOURCE : AC3¢ 440V 60Hz

극동호이스트(주)

MOTOR 용량	MOTOR 정격 전류	DRIVE TYPE	E.O.C.R TYPE	권고 SETTING 치			REMARK
				DELAY TIME	OPERATION TIME	CURRENT	
0.2KW x 6P	1.2 A	1 DRIVE	SS - 05	3 SEC	1 SEC	1.3 A	
		2DRIVE	SS - 05	3 SEC	1 SEC	2.6 A	
0.4KW x 4P	1.4 A	1 DRIVE	SS - 05	3 SEC	1 SEC	1.5 A	
		2DRIVE	SS - 05	3 SEC	1 SEC	3.1 A	
0.5KW x 6P	1.8 A	1 DRIVE	SS - 05	3 SEC	1 SEC	2.0 A	
		2DRIVE	SS - 05	3 SEC	1 SEC	4.0 A	
0.75KW x 4P	2.1 A	1 DRIVE	SS - 05	3 SEC	1 SEC	2.3 A	
		2DRIVE	SS - 05	3 SEC	1 SEC	4.6 A	
1.0KW x 6P	2.8 A	1 DRIVE	SS - 05	3 SEC	1 SEC	3.1 A	
		2DRIVE	SS - 30	3 SEC	1 SEC	6.2 A	
1.5KW x 4P	3.7 A	1 DRIVE	SS - 05	3 SEC	1 SEC	4.1 A	
		2DRIVE	SS - 30	3 SEC	1 SEC	8.1 A	
1.5KW x 6P	3.8 A	1 DRIVE	SS - 05	3 SEC	1 SEC	4.2 A	
		2DRIVE	SS - 30	3 SEC	1 SEC	8.4 A	
2.2KW x 4P	5.0 A	1 DRIVE	SS - 30	3 SEC	1 SEC	5.5 A	
		2 DRIVE	SS - 30	3 SEC	1 SEC	11.0 A	
0.8/0.4KW x 4/8P	2.4/2.27 A	1 DRIVE	SS - 05	3 SEC	1 SEC	2.6 A	
			SS - 05	3 SEC	1 SEC	2.5 A	
		2 DRIVE	SS - 30	3 SEC	1 SEC	5.3 A	
			SS - 05	3 SEC	1 SEC	5.0 A	
2.2KW x 6P	5.8 A	1 DRIVE	SS - 30	3 SEC	1 SEC	6.4 A	
		2DRIVE	SS - 30	3 SEC	1 SEC	12.8 A	
3.7KW x 4P	8.0 A	1 DRIVE	SS - 30	3 SEC	1 SEC	8.8 A	
		2DRIVE	SS - 30	3 SEC	1 SEC	17.6 A	

NOTE

1, 상기 TABLE의 수치는 권고 SETTING 수치이며 MOTOR의 특성 및 현장 조건에 따라 변경 가능함.

192.168.11.51 / 2020-03-16 10:52:57

불법복제 및 배포금지

E.O.C.R 권고 SETTING 치

* POWER SOURCE : AC3¢ 460V 60Hz

극동호이스트(주)

MOTOR 용량	MOTOR 정격 전류	DRIVE TYPE	E.O.C.R TYPE	권고 SETTING 치			REMARK
				DELAY TIME	OPERATION TIME	CURRENT	
0.2KW x 6P	1.2 A	1 DRIVE	SS - 05	3 SEC	1 SEC	1.3 A	
		2DRIVE	SS - 05	3 SEC	1 SEC	2.6 A	
0.4KW x 4P	1.4 A	1 DRIVE	SS - 05	3 SEC	1 SEC	1.5 A	
		2DRIVE	SS - 05	3 SEC	1 SEC	3.1 A	
0.5KW x 6P	1.8 A	1 DRIVE	SS - 05	3 SEC	1 SEC	2.0 A	
		2DRIVE	SS - 05	3 SEC	1 SEC	4.0 A	
0.75KW x 4P	2.0 A	1 DRIVE	SS - 05	3 SEC	1 SEC	2.2 A	
		2DRIVE	SS - 05	3 SEC	1 SEC	4.4 A	
1.0KW x 6P	2.8 A	1 DRIVE	SS - 05	3 SEC	1 SEC	3.1 A	
		2DRIVE	SS - 30	3 SEC	1 SEC	6.2 A	
1.5KW x 4P	3.7 A	1 DRIVE	SS - 05	3 SEC	1 SEC	4.1 A	
		2DRIVE	SS - 30	3 SEC	1 SEC	8.1 A	
1.5KW x 6P	3.8 A	1 DRIVE	SS - 05	3 SEC	1 SEC	4.2 A	
		2DRIVE	SS - 30	3 SEC	1 SEC	8.4 A	
2.2KW x 4P	5.0 A	1 DRIVE	SS - 30	3 SEC	1 SEC	5.5 A	
		2 DRIVE	SS - 30	3 SEC	1 SEC	11.0 A	
0.8/0.4KW x 4/8P	2.4/2.27 A	1 DRIVE	SS - 05	3 SEC	1 SEC	2.6 A	
			SS - 05	3 SEC	1 SEC	2.5 A	
		2 DRIVE	SS - 30	3 SEC	1 SEC	5.3 A	
			SS - 05	3 SEC	1 SEC	5.0 A	
2.2KW x 6P	5.8 A	1 DRIVE	SS - 30	3 SEC	1 SEC	6.4 A	
		2DRIVE	SS - 30	3 SEC	1 SEC	12.8 A	
3.7KW x 4P	8.0 A	1 DRIVE	SS - 30	3 SEC	1 SEC	8.8 A	
		2DRIVE	SS - 30	3 SEC	1 SEC	17.6 A	

NOTE

1, 상기 TABLE의 수치는 권고 SETTING 수치이며 MOTOR의 특성 및 현장 조건에 따라 변경 가능함.

192.168.11.51 / 2020-03-16 10:52:57

불법복제 및 배포금지

E.O.C.R 권고 SETTING 치

* POWER SOURCE : AC3¢ 480V 60Hz

극동호이스트(주)

MOTOR 용량	MOTOR 정격 전류	DRIVE TYPE	E.O.C.R TYPE	권고 SETTING 치			REMARK
				DELAY TIME	OPERATION TIME	CURRENT	
0.2KW x 6P	1.2 A	1 DRIVE	SS - 05	3 SEC	1 SEC	1.3 A	
		2DRIVE	SS - 05	3 SEC	1 SEC	2.6 A	
0.4KW x 4P	1.4 A	1 DRIVE	SS - 05	3 SEC	1 SEC	1.5 A	
		2DRIVE	SS - 05	3 SEC	1 SEC	3.1 A	
0.5KW x 6P	1.8 A	1 DRIVE	SS - 05	3 SEC	1 SEC	2.0 A	
		2DRIVE	SS - 05	3 SEC	1 SEC	4.0 A	
0.75KW x 4P	1.9 A	1 DRIVE	SS - 05	3 SEC	1 SEC	2.1 A	
		2DRIVE	SS - 05	3 SEC	1 SEC	4.2 A	
1.0KW x 6P	2.8 A	1 DRIVE	SS - 05	3 SEC	1 SEC	3.1 A	
		2DRIVE	SS - 30	3 SEC	1 SEC	6.2 A	
1.5KW x 4P	3.7 A	1 DRIVE	SS - 05	3 SEC	1 SEC	4.1 A	
		2DRIVE	SS - 30	3 SEC	1 SEC	8.1 A	
1.5KW x 6P	3.8 A	1 DRIVE	SS - 05	3 SEC	1 SEC	4.2 A	
		2DRIVE	SS - 30	3 SEC	1 SEC	8.4 A	
2.2KW x 4P	5.0 A	1 DRIVE	SS - 30	3 SEC	1 SEC	5.5 A	
		2 DRIVE	SS - 30	3 SEC	1 SEC	11.0 A	
0.8/0.4KW x 4/8P	2.4/2.27 A	1 DRIVE	SS - 05	3 SEC	1 SEC	2.6 A	
			SS - 05	3 SEC	1 SEC	2.5 A	
		2 DRIVE	SS - 30	3 SEC	1 SEC	5.3 A	
			SS - 05	3 SEC	1 SEC	5.0 A	
2.2KW x 6P	5.8 A	1 DRIVE	SS - 30	3 SEC	1 SEC	6.4 A	
		2DRIVE	SS - 30	3 SEC	1 SEC	12.8 A	
3.7KW x 4P	8.0 A	1 DRIVE	SS - 30	3 SEC	1 SEC	8.8 A	
		2DRIVE	SS - 30	3 SEC	1 SEC	17.6 A	

NOTE

1, 상기 TABLE의 수치는 권고 SETTING 수치이며 MOTOR의 특성 및 현장 조건에 따라 변경 가능함.

192.168.11.51 / 2020-03-16 10:52:57

불법복제 및 배포금지

불법복제 및 배포금지

THREE PHASE INDUCTION MOTOR DATA SHEET

SCHEDULE OF TECHNICAL DATA

1. SERVICE	HOISTING
2. MANUFACTURE	극동 호이스트 (주)
3. FRAME NUMBER	200 L
4. RATED POWER	17 KW x 8 P
5. RATED VOLTAGE AND FREQUENCY	220 V 60 Hz
6. MOTOR TYPE	SQUIRREL CAGE ROTOR TYPE
7. SERVICE FACTOR AND RATTING	1 . 0 , 30 MIN
8. LOCATION AND INSULATION CLASS	INDOOR, OUTDOOR, B CLASS
9. DESIGN TEMPERATURE RISE(BY RESISTANCE)	80 ℃
10. FULL LOAD SPEED	850 RPM
11. FULL LOAD CURRENT	76.6 A
12. STARTING CURRENT AT RATED VOLTAGE	455.8 A
13. MINIMUM STARTING VOLTAGE	198 V
14. EFFICIENCY AT 100% RATED LOAD	82.0 %
15. POWER FACTOR AT 100% RATED LOAD	71.5 %
16. STARTING TORQUE	39.72 KG.M
17. SITE ALTITUDE(UNDER)	1000 M
18. ENCLOSURE & COOLING METHOD	T E F C
19. TYPE OF BEARING	PL : 6312zz OPL : 6311zz
20. MOUNTING	H O R I Z O N T A L
21. MAXIMUM AMBIENT TEMPERATURE	40 ℃
22. BEARING LUBRICATION	G R E A S E
23. STARTING METHOD	F U L L V O L T A G E

192.168.11.51 / 2020-03-16 10:52:57

불법복제 및 배포금지

THREE PHASE INDUCTION MOTOR DATA SHEET

SCHEDULE OF TECHNICAL DATA

1. SERVICE	HOISTING
2. MANUFACTURE	극동 호이스트 (주)
3. FRAME NUMBER	200 L
4. RATED POWER	17 KW x 8 P
5. RATED VOLTAGE AND FREQUENCY	380 V 60 Hz
6. MOTOR TYPE	SQUIRREL CAGE ROTOR TYPE
7. SERVICE FACTOR AND RATTING	1 . 0 , 30 MIN
8. LOCATION AND INSULATION CLASS	INDOOR, OUTDOOR, B CLASS
9. DESIGN TEMPERATURE RISE(BY RESISTANCE)	80 ℃
10. FULL LOAD SPEED	850 RPM
11. FULL LOAD CURRENT	44.3 A
12. STARTING CURRENT AT RATED VOLTAGE	263.8 A
13. MINIMUM STARTING VOLTAGE	342 V
14. EFFICIENCY AT 100% RATED LOAD	82.0 %
15. POWER FACTOR AT 100% RATED LOAD	71.5 %
16. STARTING TORQUE	39.72 KG.M
17. SITE ALTITUDE(UNDER)	1000 M
18. ENCLOSURE & COOLING METHOD	T E F C
19. TYPE OF BEARING	PL : 6312zz OPL : 6311zz
20. MOUNTING	H O R I Z O N T A L
21. MAXIMUM AMBIENT TEMPERATURE	40 ℃
22. BEARING LUBRICATION	G R E A S E
23. STARTING METHOD	F U L L V O L T A G E

192.168.11.51 / 2020-03-16 10:52:57

불법복제 및 배포금지

THREE PHASE INDUCTION MOTOR DATA SHEET

SCHEDULE OF TECHNICAL DATA

1. SERVICE	HOISTING
2. MANUFACTURE	극동 호이스트 (주)
3. FRAME NUMBER	200 L
4. RATED POWER	17 KW x 8 P
5. RATED VOLTAGE AND FREQUENCY	440 V 60 Hz
6. MOTOR TYPE	SQUIRREL CAGE ROTOR TYPE
7. SERVICE FACTOR AND RATTING	1 . 0 , 30 MIN
8. LOCATION AND INSULATION CLASS	INDOOR, OUTDOOR, B CLASS
9. DESIGN TEMPERATURE RISE(BY RESISTANCE)	80 ℃
10. FULL LOAD SPEED	850 RPM
11. FULL LOAD CURRENT	38.3 A
12. STARTING CURRENT AT RATED VOLTAGE	227.9 A
13. MINIMUM STARTING VOLTAGE	396 V
14. EFFICIENCY AT 100% RATED LOAD	82.0 %
15. POWER FACTOR AT 100% RATED LOAD	71.5 %
16. STARTING TORQUE	39.72 KG.M
17. SITE ALTITUDE(UNDER)	1000 M
18. ENCLOSURE & COOLING METHOD	T E F C
19. TYPE OF BEARING	PL : 6312zz OPL : 6311zz
20. MOUNTING	H O R I Z O N T A L
21. MAXIMUM AMBIENT TEMPERATURE	40 ℃
22. BEARING LUBRICATION	G R E A S E
23. STARTING METHOD	F U L L V O L T A G E

192.168.11.51 / 2020-03-16 10:52:57

불법복제 및 배포금지

THREE PHASE INDUCTION MOTOR DATA SHEET

SCHEDULE OF TECHNICAL DATA

1. SERVICE	HOISTING
2. MANUFACTURE	극동 호이스트 (주)
3. FRAME NUMBER	200 L
4. RATED POWER	17 KW x 8 P
5. RATED VOLTAGE AND FREQUENCY	460 V 60 Hz
6. MOTOR TYPE	SQUIRREL CAGE ROTOR TYPE
7. SERVICE FACTOR AND RATTING	1 . 0 , 30 MIN
8. LOCATION AND INSULATION CLASS	INDOOR, OUTDOOR, B CLASS
9. DESIGN TEMPERATURE RISE(BY RESISTANCE)	80 ℃
10. FULL LOAD SPEED	850 RPM
11. FULL LOAD CURRENT	36.6 A
12. STARTING CURRENT AT RATED VOLTAGE	218.4 A
13. MINIMUM STARTING VOLTAGE	414 V
14. EFFICIENCY AT 100% RATED LOAD	82.0 %
15. POWER FACTOR AT 100% RATED LOAD	71.5 %
16. STARTING TORQUE	39.72 KG.M
17. SITE ALTITUDE(UNDER)	1000 M
18. ENCLOSURE & COOLING METHOD	T E F C
19. TYPE OF BEARING	PL : 6312zz OPL : 6311zz
20. MOUNTING	H O R I Z O N T A L
21. MAXIMUM AMBIENT TEMPERATURE	40 ℃
22. BEARING LUBRICATION	G R E A S E
23. STARTING METHOD	F U L L V O L T A G E

192.168.11.51 / 2020-03-16 10:52:57

불법복제 및 배포금지

THREE PHASE INDUCTION MOTOR DATA SHEET

SCHEDULE OF TECHNICAL DATA

1. SERVICE	HOISTING
2. MANUFACTURE	극동 호이스트 (주)
3. FRAME NUMBER	200 L
4. RATED POWER	17 KW x 8 P
5. RATED VOLTAGE AND FREQUENCY	480 V 60 Hz
6. MOTOR TYPE	SQUIRREL CAGE ROTOR TYPE
7. SERVICE FACTOR AND RATTING	1 . 0 , 30 MIN
8. LOCATION AND INSULATION CLASS	INDOOR, OUTDOOR, B CLASS
9. DESIGN TEMPERATURE RISE(BY RESISTANCE)	80 ℃
10. FULL LOAD SPEED	850 RPM
11. FULL LOAD CURRENT	35.2 A
12. STARTING CURRENT AT RATED VOLTAGE	209.8 A
13. MINIMUM STARTING VOLTAGE	432 V
14. EFFICIENCY AT 100% RATED LOAD	82.0 %
15. POWER FACTOR AT 100% RATED LOAD	71.5 %
16. STARTING TORQUE	39.72 KG.M
17. SITE ALTITUDE(UNDER)	1000 M
18. ENCLOSURE & COOLING METHOD	T E F C
19. TYPE OF BEARING	PL : 6312zz OPL : 6311zz
20. MOUNTING	H O R I Z O N T A L
21. MAXIMUM AMBIENT TEMPERATURE	40 ℃
22. BEARING LUBRICATION	G R E A S E
23. STARTING METHOD	F U L L V O L T A G E

192.168.11.51 / 2020-03-16 10:52:57

불법복제 및 배포금지

THREE PHASE INDUCTION MOTOR DATA SHEET

SCHEDULE OF TECHNICAL DATA

1. SERVICE	HOISTING
2. MANUFACTURE	극동 호이스트 (주)
3. FRAME NUMBER	112 M
4. RATED POWER	1.8 KW x 8 P
5. RATED VOLTAGE AND FREQUENCY	220 V 60 Hz
6. MOTOR TYPE	SQUIRREL CAGE ROTOR TYPE
7. SERVICE FACTOR AND RATTING	1 . 0 , 30 MIN
8. LOCATION AND INSULATION CLASS	INDOOR, OUTDOOR, B CLASS
9. DESIGN TEMPERATURE RISE(BY RESISTANCE)	80 ℃
10. FULL LOAD SPEED	850 RPM
11. FULL LOAD CURRENT	11.0 A
12. STARTING CURRENT AT RATED VOLTAGE	55.0 A
13. MINIMUM STARTING VOLTAGE	198 V
14. EFFICIENCY AT 100% RATED LOAD	71.5 %
15. POWER FACTOR AT 100% RATED LOAD	60.0 %
16. STARTING TORQUE	6.93 KG.M
17. SITE ALTITUDE(UNDER)	1000 M
18. ENCLOSURE & COOLING METHOD	T E N V
19. TYPE OF BEARING	PL : 6206zz OPL : 6206zz
20. MOUNTING	H O R I Z O N T A L
21. MAXIMUM AMBIENT TEMPERATURE	40 ℃
22. BEARING LUBRICATION	G R E A S E
23. STARTING METHOD	F U L L V O L T A G E

192.168.11.51 / 2020-03-16 10:52:57

불법복제 및 배포금지

THREE PHASE INDUCTION MOTOR DATA SHEET

SCHEDULE OF TECHNICAL DATA

1. SERVICE	HOISTING
2. MANUFACTURE	극동 호이스트 (주)
3. FRAME NUMBER	112 M
4. RATED POWER	1.8 KW x 8 P
5. RATED VOLTAGE AND FREQUENCY	380 V 60 Hz
6. MOTOR TYPE	SQUIRREL CAGE ROTOR TYPE
7. SERVICE FACTOR AND RATTING	1 . 0 , 30 MIN
8. LOCATION AND INSULATION CLASS	INDOOR, OUTDOOR, B CLASS
9. DESIGN TEMPERATURE RISE(BY RESISTANCE)	80 ℃
10. FULL LOAD SPEED	850 RPM
11. FULL LOAD CURRENT	6.4 A
12. STARTING CURRENT AT RATED VOLTAGE	31.9 A
13. MINIMUM STARTING VOLTAGE	342 V
14. EFFICIENCY AT 100% RATED LOAD	71.5 %
15. POWER FACTOR AT 100% RATED LOAD	60.0 %
16. STARTING TORQUE	6.93 KG.M
17. SITE ALTITUDE(UNDER)	1000 M
18. ENCLOSURE & COOLING METHOD	T E N V
19. TYPE OF BEARING	PL : 6206zz OPL : 6206zz
20. MOUNTING	H O R I Z O N T A L
21. MAXIMUM AMBIENT TEMPERATURE	40 ℃
22. BEARING LUBRICATION	G R E A S E
23. STARTING METHOD	F U L L V O L T A G E

192.168.11.51 / 2020-03-16 10:52:57

불법복제 및 배포금지

THREE PHASE INDUCTION MOTOR DATA SHEET

SCHEDULE OF TECHNICAL DATA

1. SERVICE	HOISTING
2. MANUFACTURE	극동 호이스트 (주)
3. FRAME NUMBER	112 M
4. RATED POWER	1.8 KW x 8 P
5. RATED VOLTAGE AND FREQUENCY	440 V 60 Hz
6. MOTOR TYPE	SQUIRREL CAGE ROTOR TYPE
7. SERVICE FACTOR AND RATTING	1 . 0 , 30 MIN
8. LOCATION AND INSULATION CLASS	INDOOR, OUTDOOR, B CLASS
9. DESIGN TEMPERATURE RISE(BY RESISTANCE)	80 ℃
10. FULL LOAD SPEED	850 RPM
11. FULL LOAD CURRENT	5.5 A
12. STARTING CURRENT AT RATED VOLTAGE	27.5 A
13. MINIMUM STARTING VOLTAGE	396 V
14. EFFICIENCY AT 100% RATED LOAD	71.5 %
15. POWER FACTOR AT 100% RATED LOAD	60.0 %
16. STARTING TORQUE	6.93 KG.M
17. SITE ALTITUDE(UNDER)	1000 M
18. ENCLOSURE & COOLING METHOD	T E N V
19. TYPE OF BEARING	PL : 6206zz OPL : 6206zz
20. MOUNTING	H O R I Z O N T A L
21. MAXIMUM AMBIENT TEMPERATURE	40 ℃
22. BEARING LUBRICATION	G R E A S E
23. STARTING METHOD	F U L L V O L T A G E

192.168.11.51 / 2020-03-16 10:52:57

불법복제 및 배포금지

THREE PHASE INDUCTION MOTOR DATA SHEET

SCHEDULE OF TECHNICAL DATA

1. SERVICE	HOISTING
2. MANUFACTURE	극동 호이스트 (주)
3. FRAME NUMBER	112 M
4. RATED POWER	1.8 KW x 8 P
5. RATED VOLTAGE AND FREQUENCY	460 V 60 Hz
6. MOTOR TYPE	SQUIRREL CAGE ROTOR TYPE
7. SERVICE FACTOR AND RATTING	1 . 0 , 30 MIN
8. LOCATION AND INSULATION CLASS	INDOOR, OUTDOOR, B CLASS
9. DESIGN TEMPERATURE RISE(BY RESISTANCE)	80 ℃
10. FULL LOAD SPEED	850 RPM
11. FULL LOAD CURRENT	5.3 A
12. STARTING CURRENT AT RATED VOLTAGE	26.3 A
13. MINIMUM STARTING VOLTAGE	414 V
14. EFFICIENCY AT 100% RATED LOAD	71.5 %
15. POWER FACTOR AT 100% RATED LOAD	60.0 %
16. STARTING TORQUE	6.93 KG.M
17. SITE ALTITUDE(UNDER)	1000 M
18. ENCLOSURE & COOLING METHOD	T E N V
19. TYPE OF BEARING	PL : 6206zz OPL : 6206zz
20. MOUNTING	H O R I Z O N T A L
21. MAXIMUM AMBIENT TEMPERATURE	40 ℃
22. BEARING LUBRICATION	G R E A S E
23. STARTING METHOD	F U L L V O L T A G E

192.168.11.51 / 2020-03-16 10:52:57

불법복제 및 배포금지

THREE PHASE INDUCTION MOTOR DATA SHEET

SCHEDULE OF TECHNICAL DATA

1. SERVICE	HOISTING
2. MANUFACTURE	극동 호이스트 (주)
3. FRAME NUMBER	112 M
4. RATED POWER	1.8 KW x 8 P
5. RATED VOLTAGE AND FREQUENCY	480 V 60 Hz
6. MOTOR TYPE	SQUIRREL CAGE ROTOR TYPE
7. SERVICE FACTOR AND RATTING	1 . 0 , 30 MIN
8. LOCATION AND INSULATION CLASS	INDOOR, OUTDOOR, B CLASS
9. DESIGN TEMPERATURE RISE(BY RESISTANCE)	80 ℃
10. FULL LOAD SPEED	850 RPM
11. FULL LOAD CURRENT	5.1 A
12. STARTING CURRENT AT RATED VOLTAGE	25.3 A
13. MINIMUM STARTING VOLTAGE	432 V
14. EFFICIENCY AT 100% RATED LOAD	71.5 %
15. POWER FACTOR AT 100% RATED LOAD	60.0 %
16. STARTING TORQUE	6.93 KG.M
17. SITE ALTITUDE(UNDER)	1000 M
18. ENCLOSURE & COOLING METHOD	T E N V
19. TYPE OF BEARING	PL : 6206zz OPL : 6206zz
20. MOUNTING	H O R I Z O N T A L
21. MAXIMUM AMBIENT TEMPERATURE	40 ℃
22. BEARING LUBRICATION	G R E A S E
23. STARTING METHOD	F U L L V O L T A G E

192.168.11.51 / 2020-03-16 10:52:57

불법복제 및 배포금지

THREE PHASE INDUCTION MOTOR DATA SHEET

SCHEDULE OF TECHNICAL DATA

1. SERVICE	HOISTING
2. MANUFACTURE	극동 호이스트 (주)
3. FRAME NUMBER	160 L
4. RATED POWER	9.0 KW x 8 P
5. RATED VOLTAGE AND FREQUENCY	220 V 60 Hz
6. MOTOR TYPE	SQUIRREL CAGE ROTOR TYPE
7. SERVICE FACTOR AND RATTING	1 . 0 , 30 MIN
8. LOCATION AND INSULATION CLASS	INDOOR, OUTDOOR, B CLASS
9. DESIGN TEMPERATURE RISE(BY RESISTANCE)	80 ℃
10. FULL LOAD SPEED	825 RPM
11. FULL LOAD CURRENT	45.0 A
12. STARTING CURRENT AT RATED VOLTAGE	213 A
13. MINIMUM STARTING VOLTAGE	198 V
14. EFFICIENCY AT 100% RATED LOAD	79.5 %
15. POWER FACTOR AT 100% RATED LOAD	66.4 %
16. STARTING TORQUE	15.9 KG.M
17. SITE ALTITUDE(UNDER)	1000 M
18. ENCLOSURE & COOLING METHOD	T E N V
19. TYPE OF BEARING	PL : 6309zz OPL : 6308zz
20. MOUNTING	H O R I Z O N T A L
21. MAXIMUM AMBIENT TEMPERATURE	40 ℃
22. BEARING LUBRICATION	G R E A S E
23. STARTING METHOD	F U L L V O L T A G E

192.168.11.51 / 2020-03-16 10:52:57

불법복제 및 배포금지

THREE PHASE INDUCTION MOTOR DATA SHEET

SCHEDULE OF TECHNICAL DATA

1. SERVICE	HOISTING
2. MANUFACTURE	극동 호이스트 (주)
3. FRAME NUMBER	160 L
4. RATED POWER	9.0 KW x 8 P
5. RATED VOLTAGE AND FREQUENCY	380 V 60 Hz
6. MOTOR TYPE	SQUIRREL CAGE ROTOR TYPE
7. SERVICE FACTOR AND RATTING	1 . 0 , 30 MIN
8. LOCATION AND INSULATION CLASS	INDOOR, OUTDOOR, B CLASS
9. DESIGN TEMPERATURE RISE(BY RESISTANCE)	80 ℃
10. FULL LOAD SPEED	825 RPM
11. FULL LOAD CURRENT	26.0 A
12. STARTING CURRENT AT RATED VOLTAGE	122.9 A
13. MINIMUM STARTING VOLTAGE	342 V
14. EFFICIENCY AT 100% RATED LOAD	79.5 %
15. POWER FACTOR AT 100% RATED LOAD	66.4 %
16. STARTING TORQUE	15.9 KG.M
17. SITE ALTITUDE(UNDER)	1000 M
18. ENCLOSURE & COOLING METHOD	T E N V
19. TYPE OF BEARING	PL : 6309zz OPL : 6308zz
20. MOUNTING	H O R I Z O N T A L
21. MAXIMUM AMBIENT TEMPERATURE	40 ℃
22. BEARING LUBRICATION	G R E A S E
23. STARTING METHOD	F U L L V O L T A G E

192.168.11.51 / 2020-03-16 10:52:57

불법복제 및 배포금지

THREE PHASE INDUCTION MOTOR DATA SHEET

SCHEDULE OF TECHNICAL DATA

1. SERVICE	HOISTING
2. MANUFACTURE	극동 호이스트 (주)
3. FRAME NUMBER	160 L
4. RATED POWER	9.0 KW x 8 P
5. RATED VOLTAGE AND FREQUENCY	440 V 60 Hz
6. MOTOR TYPE	SQUIRREL CAGE ROTOR TYPE
7. SERVICE FACTOR AND RATTING	1 . 0 , 30 MIN
8. LOCATION AND INSULATION CLASS	INDOOR, OUTDOOR, B CLASS
9. DESIGN TEMPERATURE RISE(BY RESISTANCE)	80 ℃
10. FULL LOAD SPEED	825 RPM
11. FULL LOAD CURRENT	22.5 A
12. STARTING CURRENT AT RATED VOLTAGE	106.0 A
13. MINIMUM STARTING VOLTAGE	396 V
14. EFFICIENCY AT 100% RATED LOAD	79.5 %
15. POWER FACTOR AT 100% RATED LOAD	66.4 %
16. STARTING TORQUE	15.9 KG.M
17. SITE ALTITUDE(UNDER)	1000 M
18. ENCLOSURE & COOLING METHOD	T E N V
19. TYPE OF BEARING	PL : 6309zz OPL : 6308zz
20. MOUNTING	H O R I Z O N T A L
21. MAXIMUM AMBIENT TEMPERATURE	40 ℃
22. BEARING LUBRICATION	G R E A S E
23. STARTING METHOD	F U L L V O L T A G E

192.168.11.51 / 2020-03-16 10:52:57

불법복제 및 배포금지

THREE PHASE INDUCTION MOTOR DATA SHEET

SCHEDULE OF TECHNICAL DATA

1. SERVICE	HOISTING
2. MANUFACTURE	극동 호이스트 (주)
3. FRAME NUMBER	160 L
4. RATED POWER	9.0 KW x 8 P
5. RATED VOLTAGE AND FREQUENCY	460 V 60 Hz
6. MOTOR TYPE	SQUIRREL CAGE ROTOR TYPE
7. SERVICE FACTOR AND RATTING	1 . 0 , 30 MIN
8. LOCATION AND INSULATION CLASS	INDOOR, OUTDOOR, B CLASS
9. DESIGN TEMPERATURE RISE(BY RESISTANCE)	80 ℃
10. FULL LOAD SPEED	825 RPM
11. FULL LOAD CURRENT	21.5 A
12. STARTING CURRENT AT RATED VOLTAGE	102.2 A
13. MINIMUM STARTING VOLTAGE	414 V
14. EFFICIENCY AT 100% RATED LOAD	79.5 %
15. POWER FACTOR AT 100% RATED LOAD	66.4 %
16. STARTING TORQUE	15.9 KG.M
17. SITE ALTITUDE(UNDER)	1000 M
18. ENCLOSURE & COOLING METHOD	T E N V
19. TYPE OF BEARING	PL : 6309zz OPL : 6308zz
20. MOUNTING	H O R I Z O N T A L
21. MAXIMUM AMBIENT TEMPERATURE	40 ℃
22. BEARING LUBRICATION	G R E A S E
23. STARTING METHOD	F U L L V O L T A G E

192.168.11.51 / 2020-03-16 10:52:57

불법복제 및 배포금지

THREE PHASE INDUCTION MOTOR DATA SHEET

SCHEDULE OF TECHNICAL DATA

1. SERVICE	HOISTING
2. MANUFACTURE	극동 호이스트 (주)
3. FRAME NUMBER	160 L
4. RATED POWER	9.0 KW x 8 P
5. RATED VOLTAGE AND FREQUENCY	480 V 60 Hz
6. MOTOR TYPE	SQUIRREL CAGE ROTOR TYPE
7. SERVICE FACTOR AND RATTING	1 . 0 , 30 MIN
8. LOCATION AND INSULATION CLASS	INDOOR, OUTDOOR, B CLASS
9. DESIGN TEMPERATURE RISE(BY RESISTANCE)	80 ℃
10. FULL LOAD SPEED	825 RPM
11. FULL LOAD CURRENT	20.6 A
12. STARTING CURRENT AT RATED VOLTAGE	97.97 A
13. MINIMUM STARTING VOLTAGE	432 V
14. EFFICIENCY AT 100% RATED LOAD	79.5 %
15. POWER FACTOR AT 100% RATED LOAD	66.4 %
16. STARTING TORQUE	15.9 KG.M
17. SITE ALTITUDE(UNDER)	1000 M
18. ENCLOSURE & COOLING METHOD	T E N V
19. TYPE OF BEARING	PL : 6309zz OPL : 6308zz
20. MOUNTING	H O R I Z O N T A L
21. MAXIMUM AMBIENT TEMPERATURE	40 ℃
22. BEARING LUBRICATION	G R E A S E
23. STARTING METHOD	F U L L V O L T A G E

192.168.11.51 / 2020-03-16 10:52:57

불법복제 및 배포금지

THREE PHASE INDUCTION MOTOR DATA SHEET

SCHEDULE OF TECHNICAL DATA

1. SERVICE	HOISTING
2. MANUFACTURE	극동 호이스트 (주)
3. FRAME NUMBER	112 S
4. RATED POWER	1.1 KW x 8 P
5. RATED VOLTAGE AND FREQUENCY	220 V 60 Hz
6. MOTOR TYPE	SQUIRREL CAGE ROTOR TYPE
7. SERVICE FACTOR AND RATTING	1 . 0 , 30 MIN
8. LOCATION AND INSULATION CLASS	INDOOR, OUTDOOR, B CLASS
9. DESIGN TEMPERATURE RISE(BY RESISTANCE)	80 ℃
10. FULL LOAD SPEED	830 RPM
11. FULL LOAD CURRENT	7.95 A
12. LOCKED ROTOR CURRENT	41.1 A
13. MINIMUM STARTING VOLTAGE	198 V
14. EFFICIENCY AT 100% RATED LOAD	71.0 %
15. POWER FACTOR AT 100% RATED LOAD	51.5 %
16. STARTING TORQUE	2.85 KG.M
17. SITE ALTITUDE(UNDER)	1000 M
18. ENCLOSURE & COOLING METHOD	T E N V
19. TYPE OF BEARING	PL : 6208zz OPL : 6206zz
20. MOUNTING	H O R I Z O N T A L
21. MAXIMUM AMBIENT TEMPERATURE	40 ℃
22. BEARING LUBRICATION	G R E A S E
23. STARTING METHOD	F U L L V O L T A G E

192.168.11.51 / 2020-03-16 10:52:57

불법복제 및 배포금지

THREE PHASE INDUCTION MOTOR DATA SHEET

SCHEDULE OF TECHNICAL DATA

1. SERVICE	HOISTING
2. MANUFACTURE	극동 호이스트 (주)
3. FRAME NUMBER	112 S
4. RATED POWER	1.1 KW x 8 P
5. RATED VOLTAGE AND FREQUENCY	380 V 60 Hz
6. MOTOR TYPE	SQUIRREL CAGE ROTOR TYPE
7. SERVICE FACTOR AND RATTING	1 . 0 , 30 MIN
8. LOCATION AND INSULATION CLASS	INDOOR, OUTDOOR, B CLASS
9. DESIGN TEMPERATURE RISE(BY RESISTANCE)	80 ℃
10. FULL LOAD SPEED	830 RPM
11. FULL LOAD CURRENT	4.57 A
12. LOCKED ROTOR CURRENT	23.8 A
13. MINIMUM STARTING VOLTAGE	342 V
14. EFFICIENCY AT 100% RATED LOAD	71.0 %
15. POWER FACTOR AT 100% RATED LOAD	51.5 %
16. STARTING TORQUE	2.85 KG.M
17. SITE ALTITUDE(UNDER)	1000 M
18. ENCLOSURE & COOLING METHOD	T E N V
19. TYPE OF BEARING	PL : 6208zz OPL : 6206zz
20. MOUNTING	H O R I Z O N T A L
21. MAXIMUM AMBIENT TEMPERATURE	40 ℃
22. BEARING LUBRICATION	G R E A S E
23. STARTING METHOD	F U L L V O L T A G E

192.168.11.51 / 2020-03-16 10:52:57

불법복제 및 배포금지

THREE PHASE INDUCTION MOTOR DATA SHEET

SCHEDULE OF TECHNICAL DATA

1. SERVICE	HOISTING
2. MANUFACTURE	극동 호이스트 (주)
3. FRAME NUMBER	112 S
4. RATED POWER	1.1 KW x 8 P
5. RATED VOLTAGE AND FREQUENCY	440 V 60 Hz
6. MOTOR TYPE	SQUIRREL CAGE ROTOR TYPE
7. SERVICE FACTOR AND RATTING	1 . 0 , 30 MIN
8. LOCATION AND INSULATION CLASS	INDOOR, OUTDOOR, B CLASS
9. DESIGN TEMPERATURE RISE(BY RESISTANCE)	80 ℃
10. FULL LOAD SPEED	830 RPM
11. FULL LOAD CURRENT	3.95 A
12. LOCKED ROTOR CURRENT	20.55 A
13. MINIMUM STARTING VOLTAGE	396 V
14. EFFICIENCY AT 100% RATED LOAD	71.0 %
15. POWER FACTOR AT 100% RATED LOAD	51.5 %
16. STARTING TORQUE	2.85 KG.M
17. SITE ALTITUDE(UNDER)	1000 M
18. ENCLOSURE & COOLING METHOD	T E N V
19. TYPE OF BEARING	PL : 6208zz OPL : 6006zz
20. MOUNTING	H O R I Z O N T A L
21. MAXIMUM AMBIENT TEMPERATURE	40 ℃
22. BEARING LUBRICATION	G R E A S E
23. STARTING METHOD	F U L L V O L T A G E

192.168.11.51 / 2020-03-16 10:52:57

불법복제 및 배포금지

THREE PHASE INDUCTION MOTOR DATA SHEET

SCHEDULE OF TECHNICAL DATA

1. SERVICE	HOISTING
2. MANUFACTURE	극동 호이스트 (주)
3. FRAME NUMBER	112 S
4. RATED POWER	1.1 KW x 8 P
5. RATED VOLTAGE AND FREQUENCY	460 V 60 Hz
6. MOTOR TYPE	SQUIRREL CAGE ROTOR TYPE
7. SERVICE FACTOR AND RATTING	1 . 0 , 30 MIN
8. LOCATION AND INSULATION CLASS	INDOOR, OUTDOOR, B CLASS
9. DESIGN TEMPERATURE RISE(BY RESISTANCE)	80 ℃
10. FULL LOAD SPEED	830 RPM
11. FULL LOAD CURRENT	3.7 A
12. LOCKED ROTOR CURRENT	18.73 A
13. MINIMUM STARTING VOLTAGE	414 V
14. EFFICIENCY AT 100% RATED LOAD	71.0 %
15. POWER FACTOR AT 100% RATED LOAD	51.5 %
16. STARTING TORQUE	2.85 KG.M
17. SITE ALTITUDE(UNDER)	1000 M
18. ENCLOSURE & COOLING METHOD	T E N V
19. TYPE OF BEARING	PL : 6208zz OPL : 6006zz
20. MOUNTING	H O R I Z O N T A L
21. MAXIMUM AMBIENT TEMPERATURE	40 ℃
22. BEARING LUBRICATION	G R E A S E
23. STARTING METHOD	F U L L V O L T A G E

192.168.11.51 / 2020-03-16 10:52:57

불법복제 및 배포금지

THREE PHASE INDUCTION MOTOR DATA SHEET

SCHEDULE OF TECHNICAL DATA

1. SERVICE	HOISTING
2. MANUFACTURE	극동 호이스트 (주)
3. FRAME NUMBER	112 S
4. RATED POWER	1.1 KW x 8 P
5. RATED VOLTAGE AND FREQUENCY	480 V 60 Hz
6. MOTOR TYPE	SQUIRREL CAGE ROTOR TYPE
7. SERVICE FACTOR AND RATTING	1 . 0 , 30 MIN
8. LOCATION AND INSULATION CLASS	INDOOR, OUTDOOR, B CLASS
9. DESIGN TEMPERATURE RISE(BY RESISTANCE)	80 ℃
10. FULL LOAD SPEED	830 RPM
11. FULL LOAD CURRENT	3.6 A
12. LOCKED ROTOR CURRENT	18.53 A
13. MINIMUM STARTING VOLTAGE	432 V
14. EFFICIENCY AT 100% RATED LOAD	71.0 %
15. POWER FACTOR AT 100% RATED LOAD	51.5 %
16. STARTING TORQUE	2.85 KG.M
17. SITE ALTITUDE(UNDER)	1000 M
18. ENCLOSURE & COOLING METHOD	T E N V
19. TYPE OF BEARING	PL : 6208zz OPL : 6006zz
20. MOUNTING	H O R I Z O N T A L
21. MAXIMUM AMBIENT TEMPERATURE	40 ℃
22. BEARING LUBRICATION	G R E A S E
23. STARTING METHOD	F U L L V O L T A G E

192.168.11.51 / 2020-03-16 10:52:57